No. PF-2Y5A

TCM®

PARTS CATALOGUE

FORKLIFT TRUCK

Diesel Powered

FD35T3S

TCM CORPORATION

ご使用のまえに

このパーツカタログは，TCM フォークリフト の構成部品を収録しています。

部品ご注文について

部品ご注文の際は，必ず車両の形式・仕様・製造番号（号車），部品番号および注文数を明示してください。車両の製造番号（号車）は車両銘板に表示しています。

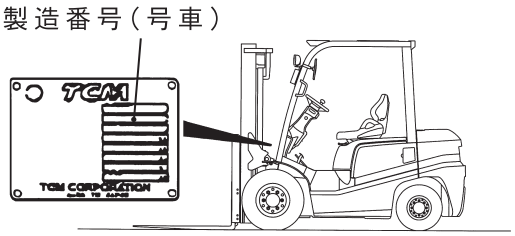

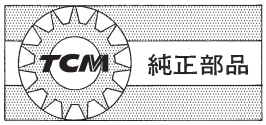

部品は，必ず「TCM 純正部品」をご使用ください。
純正部品以外の部品をご使用になり，故障が発生した場合は保証できません。

ご使用について

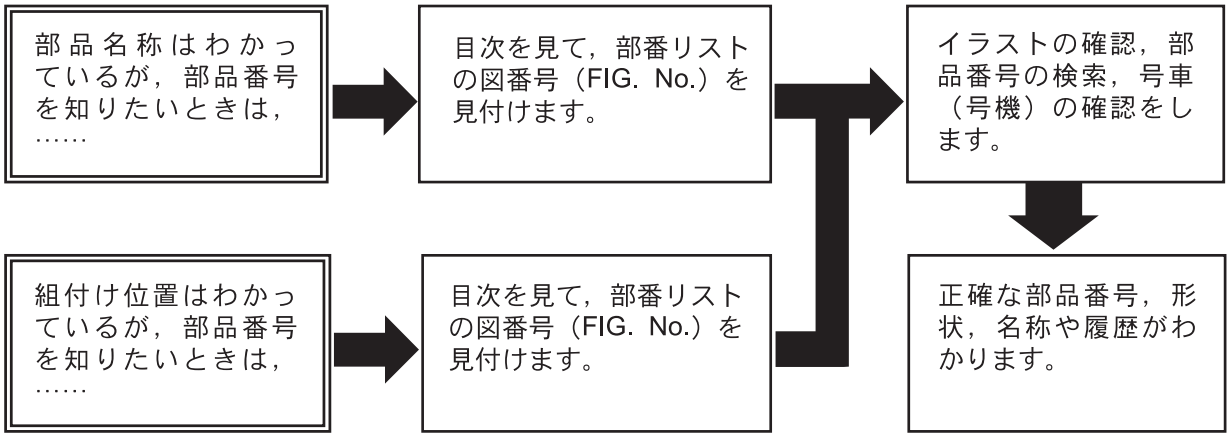

略語および記号

ＡＳＳＹ	組立品を示します。
ＲＨ	車両の前方向に向かって右側を示します。
ＬＨ	車両の前方向に向かって左側を示します。
ＡＲ	必要に応じた数を使用します。
＊	セットおよびキットの販売部品を示します。
Ｔ	厚みを示します。
＋	図示していません。
♯	単体販売しません。

部品は，品質向上のため予告なく変更することがありますので，あらかじめご了承ください。
詳細は，TCM 指定整備工場にご相談ください。

INTRODUCTION

This Parts Catalogue contains the component parts of the TCM FORKLIFT TRUCK.

How to order parts

When ordering, be sure to specify the model name, specification and serial number (machine number) of your machine, as well as the part number and desired quantity for each part. The machine serial number (machine number) is indicated on the machine name plate.

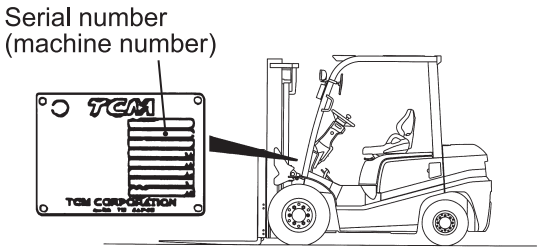

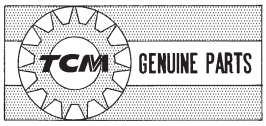

Always use "TCM's Genuine Parts". We cannot guarantee any loss or trouble attributable to other parts than ours.

How to use the Parts Catalogue

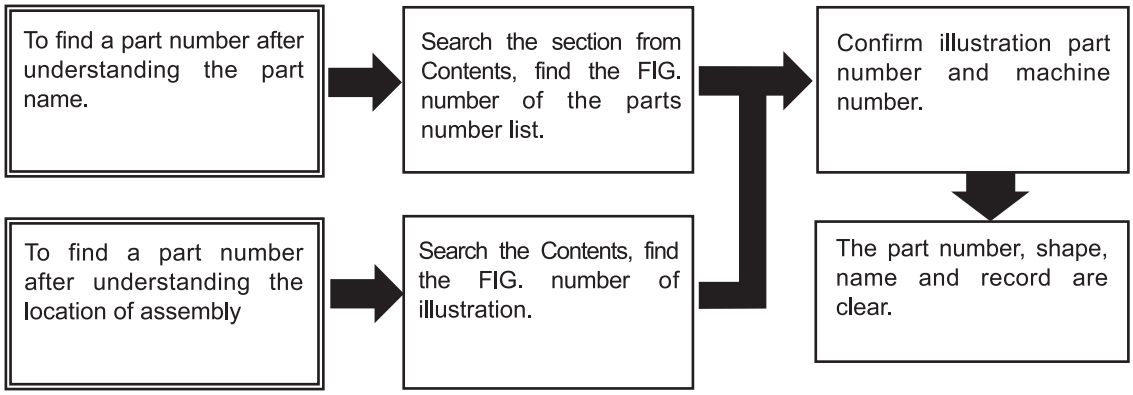

Abbreviations and symbols

ASSY ···	Assembled unit.
RH ·····	Right-hand when viewed forward on the truck.
LH ·····	Left-hand when viewed forward on the truck.
AR ·····	Quantity required.
＊ ·····	The marketable part set or kit.
T ·····	Thickness.
＋ ·····	Not illustrated.
♯ ·····	Not sold separately.

Materals and specifications subject to change without notice.

CONTENTS　目次

CHASSIS ｼｬｰｼ

FD35T3S

SECTION	部門	FIG.NO.
ENGINE MOUNT	ｴﾝｼﾞﾝﾏｳﾝﾄ	1
AIR CLEANER	ｴｱｰｸﾘｰﾅ	2
AIR DUCT	ｴｱｰﾀﾞｸﾄ	3
COOLING UNIT	ｸｰﾘﾝｸﾞﾕﾆｯﾄ	4
FAN SHROUD	ﾌｧﾝｼｭﾗｳﾄﾞ	5
RADIATOR PARTS & RESERVE TANK	ﾗｼﾞｴｰﾀﾊﾟｰﾂ&ﾘｻﾞｰﾌﾞﾀﾝｸ	6
RADIATOR HOSE	ﾗｼﾞｴｰﾀﾎｰｽ	7
FUEL SYSTEM	ﾌｭｰｴﾙｼｽﾃﾑ	8
EXHAUST SYSTEM	ｴｷｿﾞｰｽﾄｼｽﾃﾑ	9
FRONT TUBE & JOINT	ﾌﾛﾝﾄﾁｭｰﾌﾞ&ｼﾞｮｲﾝﾄ	10
COMBINATION METER	ｺﾝﾋﾞﾈｰｼｮﾝﾒｰﾀ	11
ENGINE WIRE HARNESS	ｴﾝｼﾞﾝﾜｲﾔﾊｰﾈｽ	12
FRONT GUARD WIRE HARNESS	ﾌﾛﾝﾄｶﾞｰﾄﾞﾜｲﾔﾊｰﾈｽ	13
COMBINATION SWITCH	ｺﾝﾋﾞﾈｰｼｮﾝｽｲｯﾁ	14
ELECTRIC PARTS	ｴﾚｸﾄﾘｯｸﾊﾟｰﾂ	15
BATTERY	ﾊﾞｯﾃﾘ	16
HEAD LAMP & FRONT COMBINATION LAMP	ﾍｯﾄﾞﾗﾝﾌﾟ&ﾌﾛﾝﾄｺﾝﾋﾞﾈｰｼｮﾝﾗﾝﾌﾟ	17
REAR COMBINATION LAMP	ﾘﾔｰｺﾝﾋﾞﾈｰｼｮﾝﾗﾝﾌﾟ	18
BACK BUZZER	ﾊﾞｯｸﾌﾞｻﾞｰ	19
DRIVE UNIT MOUNT	ﾄﾞﾗｲﾌﾞﾕﾆｯﾄﾏｳﾝﾄ	20
TORQUE CONVERTER CASE	ﾄﾙｸｺﾝﾊﾞｰﾀｹｰｽ	21
CHARGING PUMP	ﾁｬｰｼﾞﾝｸﾞﾎﾟﾝﾌﾟ	22
MISSION CASE	ﾐｯｼｮﾝｹｰｽ	23
CLUTCH PACK	ｸﾗｯﾁﾊﾟｯｸ	24
CONTROL VALVE	ｺﾝﾄﾛｰﾙﾊﾞﾙﾌﾞ	25
DRIVE AXLE	ﾄﾞﾗｲﾌﾞｱｸｽﾙ	26
DRUM HUB	ﾄﾞﾗﾑﾊﾌﾞ	27
PROPELLER SHAFT	ﾌﾟﾛﾍﾟﾗｼｬﾌﾄ	28
REDUCTION & DIFFERENTIAL	ﾘﾀﾞｸｼｮﾝ&ﾃﾞﾌｧﾚﾝｼｬﾙ	29
REDUCTION	ﾘﾀﾞｸｼｮﾝ	30
DIFFERENTIAL	ﾃﾞﾌｧﾚﾝｼｬﾙ	31
WHEEL BRAKE	ﾎｲｰﾙﾌﾞﾚｰｷ	32
STEERING WHEEL UNIT	ｽﾃｱﾘﾝｸﾞﾎｲｰﾙﾕﾆｯﾄ	33
ORBITROL	ｵｰﾋﾞｯﾄﾛｰﾙ	34
STEERING WHEEL	ｽﾃｱﾘﾝｸﾞﾎｲｰﾙ	35
ORBITROL FITTING	ｵｰﾋﾞｯﾄﾛｰﾙﾌｨｯﾃｨﾝｸﾞ	36
STEERING AXLE	ｽﾃｱﾘﾝｸﾞｱｸｽﾙ	37
AXLE SUPPORT	ｱｸｽﾙｻﾎﾟｰﾄ	38
HUB NUT	ﾊﾌﾞﾅｯﾄ	39
FENDER	ﾌｪﾝﾀﾞ	40
FRONT WHEEL	ﾌﾛﾝﾄﾎｲｰﾙ	41
REAR WHEEL	ﾘﾔｰﾎｲｰﾙ	42

CONTENTS　目次

CHASSIS ｼｬｰｼ

FD35T3S

SECTION	部門	FIG.NO.
POWER CYLINDER	ﾊﾟﾜｰｼﾘﾝﾀﾞ	43
OVERHEAD GUARD	ｵｰﾊﾞﾍｯﾄﾞｶﾞｰﾄﾞ	44
FRONT LAMP BRACKET	ﾌﾛﾝﾄﾗﾝﾌﾟﾌﾞﾗｹｯﾄ	45
REAR LAMP COVER	ﾘﾔｰﾗﾝﾌﾟｶﾊﾞｰ	46
HEAD GUARD PARTS	ﾍｯﾄﾞｶﾞｰﾄﾞﾊﾟｰﾂ	47
POP RIVET	ﾎﾟｯﾌﾟﾘﾍﾞｯﾄ	48
ACCEL PEDAL	ｱｸｾﾙﾍﾟﾀﾞﾙ	49
FOOT PEDAL	ﾌｯﾄﾍﾟﾀﾞﾙ	50
FOOT PEDAL CYLINDER	ﾌｯﾄﾍﾟﾀﾞﾙｼﾘﾝﾀﾞ	51
BRAKE PIPE	ﾌﾞﾚｰｷﾊﾟｲﾌﾟ	52
FOOT PEDAL PARTS	ﾌｯﾄﾍﾟﾀﾞﾙﾊﾟｰﾂ	53
BRAKE MASTER CYLINDER	ﾌﾞﾚｰｷﾏｽﾀｼﾘﾝﾀﾞ	54
BRAKE LEVER	ﾌﾞﾚｰｷﾚﾊﾞｰ	55
FRAME	ﾌﾚｰﾑ	56
OIL TANK	ｵｲﾙﾀﾝｸ	57
OIL CAP & LEVEL	ｵｲﾙｷｬｯﾌﾟ&ﾚﾍﾞﾙ	58
FUEL TANK	ﾌｭｰｴﾙﾀﾝｸ	59
BALANCE WEIGHT	ﾊﾞﾗﾝｽｳｴｲﾄ	60
FRONT GUARD	ﾌﾛﾝﾄｶﾞｰﾄﾞ	61
BONNET	ﾎﾞﾝﾈｯﾄ	62
RADIATOR COVER	ﾗｼﾞｴｰﾀｶﾊﾞｰ	63
BONNET HINGE	ﾎﾞﾝﾈｯﾄﾋﾝｼﾞ	64
FLOOR BOARD	ﾌﾛｱﾎﾞｰﾄﾞ	65
STEP & FLOOR MAT	ｽﾃｯﾌﾟ＆ﾌﾛｱﾏｯﾄ	66
FRONT COVER	ﾌﾛﾝﾄｶﾊﾞｰ	67
SIDE COVER	ｻｲﾄﾞｶﾊﾞｰ	68
FRONT SIDE COVER	ﾌﾛﾝﾄｻｲﾄﾞｶﾊﾞｰ	69
SEAT	ｼｰﾄ	70
PUMP UNIT	ﾎﾟﾝﾌﾟﾕﾆｯﾄ	71
CONTROL VALVE [2SV]	ｺﾝﾄﾛｰﾙﾊﾞﾙﾌﾞ	72
CONTROL VALVE [3SV]	ｺﾝﾄﾛｰﾙﾊﾞﾙﾌﾞ	73
CONTROL VALVE [4SV]	ｺﾝﾄﾛｰﾙﾊﾞﾙﾌﾞ	74
CONTROL VALVE [5SV]	ｺﾝﾄﾛｰﾙﾊﾞﾙﾌﾞ	75
CONTROL VALVE FITTING	ｺﾝﾄﾛｰﾙﾊﾞﾙﾌﾞﾌｨｯﾃｨﾝｸﾞ	76
VALVE CONTROL [2SV]	ﾊﾞﾙﾌﾞｺﾝﾄﾛｰﾙ	77
VALVE CONTROL [3SV]	ﾊﾞﾙﾌﾞｺﾝﾄﾛｰﾙ	78
VALVE CONTROL [4SV]	ﾊﾞﾙﾌﾞｺﾝﾄﾛｰﾙ	79
VALVE CONTROL [5SV]	ﾊﾞﾙﾌﾞｺﾝﾄﾛｰﾙ	80
VALVE CONTROL KNOB	ﾊﾞﾙﾌﾞｺﾝﾄﾛｰﾙﾉﾌﾞ	81
FRONT COVER	ﾌﾛﾝﾄｶﾊﾞｰ	82
COMBINATION VALVE	ｺﾝﾋﾞﾈｰｼｮﾝﾊﾞﾙﾌﾞ	83
VALVE SECTION [3SV][4SV][5SV]	ﾊﾞﾙﾌﾞｾｸｼｮﾝ	84

CONTENTS　目次

CHASSIS ｼｬｰｼ

FD35T3S

SECTION　部門		FIG.NO.
HYDRAULIC LINE (MAIN)(1/4)	ﾊｲﾄﾞﾛﾘｯｸﾗｲﾝ(ﾒｲﾝ)(1/4)	85
HYDRAULIC LINE (MAIN)(2/4)	ﾊｲﾄﾞﾛﾘｯｸﾗｲﾝ(ﾒｲﾝ)(2/4)	86
HYDRAULIC LINE (MAIN)(3/4)	ﾊｲﾄﾞﾛﾘｯｸﾗｲﾝ(ﾒｲﾝ)(3/4)	87
HYDRAULIC LINE (MAIN)(4/4)	ﾊｲﾄﾞﾛﾘｯｸﾗｲﾝ(ﾒｲﾝ)(4/4)	88
HYDRAULIC LINE	ﾊｲﾄﾞﾛﾘｯｸﾗｲﾝ(ﾄﾙｺﾝ)	89
TILT CYLINDER	ﾃｨﾙﾄｼﾘﾝﾀﾞ	90
DECAL (1/2)	ﾃﾞｶﾙ(1/2)	91
DECAL (2/2)	ﾃﾞｶﾙ(2/2)	92

CONTENTS　目次

MAST ﾏｽﾄ

FD35T3S

SECTION	部門	FIG.NO.
[VM2Y5]		
FORK [VM2Y5]	ﾌｫｰｸ	93
LIFT BRACKET [VM2Y5]	ﾘﾌﾄﾌﾞﾗｹｯﾄ	94
BACKREST [VM2Y5]	ﾊﾞｯｸﾚｽﾄ	95
MAST [VM2Y5]	ﾏｽﾄ	96
LIFT CYLINDER [VM2Y5]	ﾘﾌﾄｼﾘﾝﾀﾞ	97
MAST PIPING [VM2Y5]	ﾏｽﾄﾊﾟｲﾋﾟﾝｸﾞ	98
[VFM2Y5]		
FORK [VFM2Y5]	ﾌｫｰｸ	99
LIFT BRACKET [VFM2Y5]	ﾘﾌﾄﾌﾞﾗｹｯﾄ	100
BACKREST [VFM2Y5]	ﾊﾞｯｸﾚｽﾄ	101
MAST [VFM2Y5]	ﾏｽﾄ	102
LIFT CYLINDER(FRONT) [VFM2Y5]	ﾘﾌﾄｼﾘﾝﾀﾞ(ﾌﾛﾝﾄ)	103
LIFT CYLINDER(REAR) [VFM2Y5]	ﾘﾌﾄｼﾘﾝﾀﾞ(ﾘﾔｰ)	104
MAST PIPING [VFM2Y5]	ﾏｽﾄﾊﾟｲﾋﾟﾝｸﾞ	105
[VFHM2Y5]		
FORK [VFHM2Y5]	ﾌｫｰｸ	106
LIFT BRACKET [VFHM2Y5]	ﾘﾌﾄﾌﾞﾗｹｯﾄ	107
BACKREST [VFHM2Y5]	ﾊﾞｯｸﾚｽﾄ	108
MAST [VFHM2Y5]	ﾏｽﾄ	109
LIFT CYLINDER(FRONT) [VFHM2Y5]	ﾘﾌﾄｼﾘﾝﾀﾞ(ﾌﾛﾝﾄ)	110
LIFT CYLINDER(REAR) [VFHM2Y5]	ﾘﾌﾄｼﾘﾝﾀﾞ(ﾘﾔｰ)	111
MAST PIPING [VFHM2Y5]	ﾏｽﾄﾊﾟｲﾋﾟﾝｸﾞ	112

M E M O

FIG.1 ENGINE MOUNT

(F7C31020) エンジンマウント

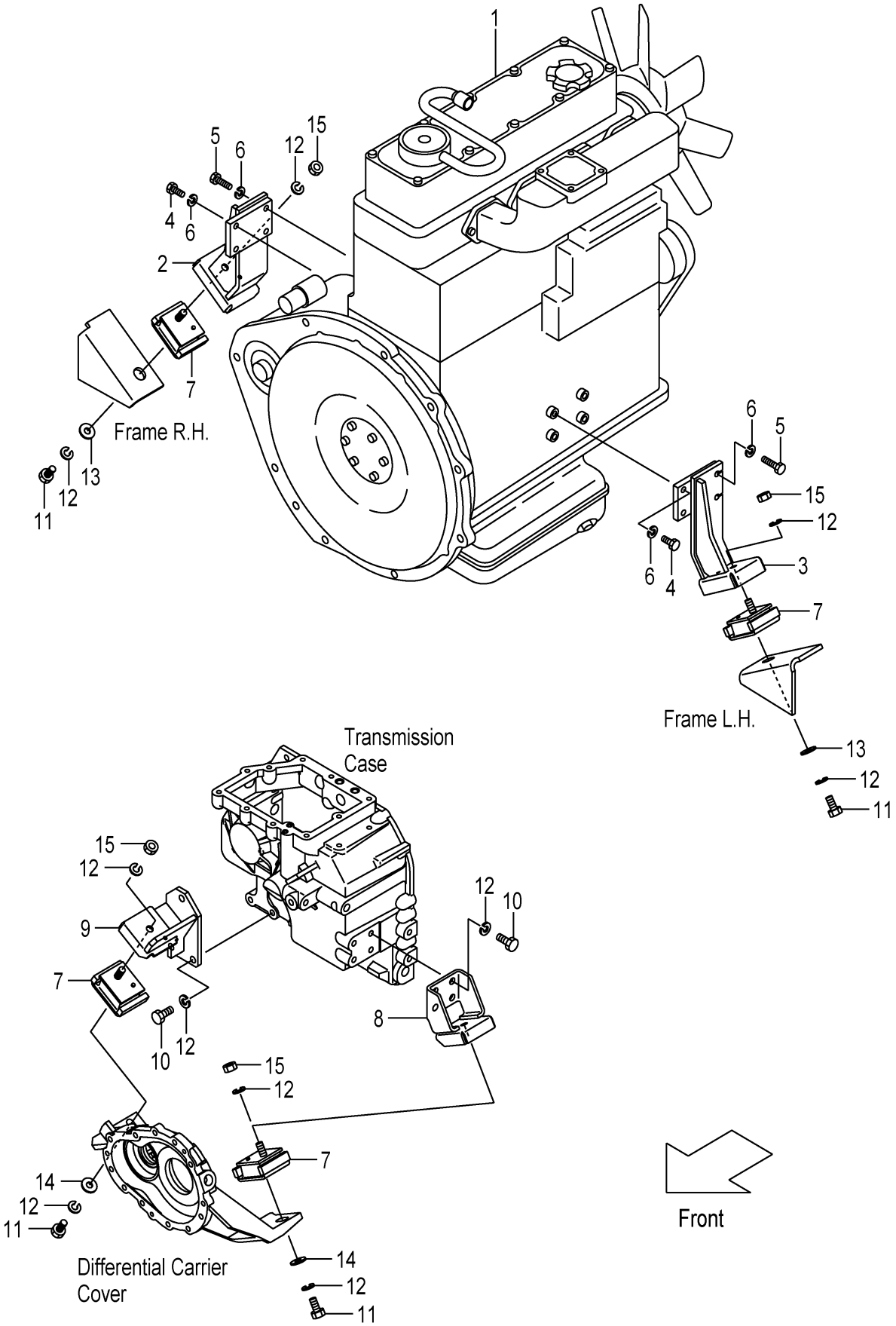

FIG.1

(F7C31020)

A:FD35T3S

Item No	Part No.	Mark	Description		Req'd	Remarks : Serial No.
1	22Y51-00102		ENGINE,QD32	ｴﾝｼﾞﾝ	1	
2	22N51-00501		BRACKET,ENGINE,RH	ﾌﾞﾗｹｯﾄ	1	
3	22N51-00511		BRACKET,ENGINE,LH	ﾌﾞﾗｹｯﾄ	1	
4	01116-10030		BOLT	ﾎﾞﾙﾄ	4	
5	01116-10040		BOLT	ﾎﾞﾙﾄ	4	
6	02011-00010		WASHER	ﾜｯｼｬ	8	
7	22N51-00161		RUBBER,CUSHION	ﾗﾊﾞｰ	4	
8	22N51-00201		BRACKET,FRONT,LH	ﾌﾞﾗｹｯﾄ	1	
9	22N51-00211		BRACKET,FRONT,RH	ﾌﾞﾗｹｯﾄ	1	
10	01103-12030		BOLT	ﾎﾞﾙﾄ	7	
11	01103-12025		BOLT	ﾎﾞﾙﾄ	4	
12	02011-00012		WASHER	ﾜｯｼｬ	15	
13	256C6-32011		WASHER	ﾜｯｼｬ	2	
14	256C9-52372		WASHER	ﾜｯｼｬ	2	
15	01400-00012		NUT	ﾅｯﾄ	4	

FIG.2 AIR CLEANER

(F7C31040) エアークリーナ

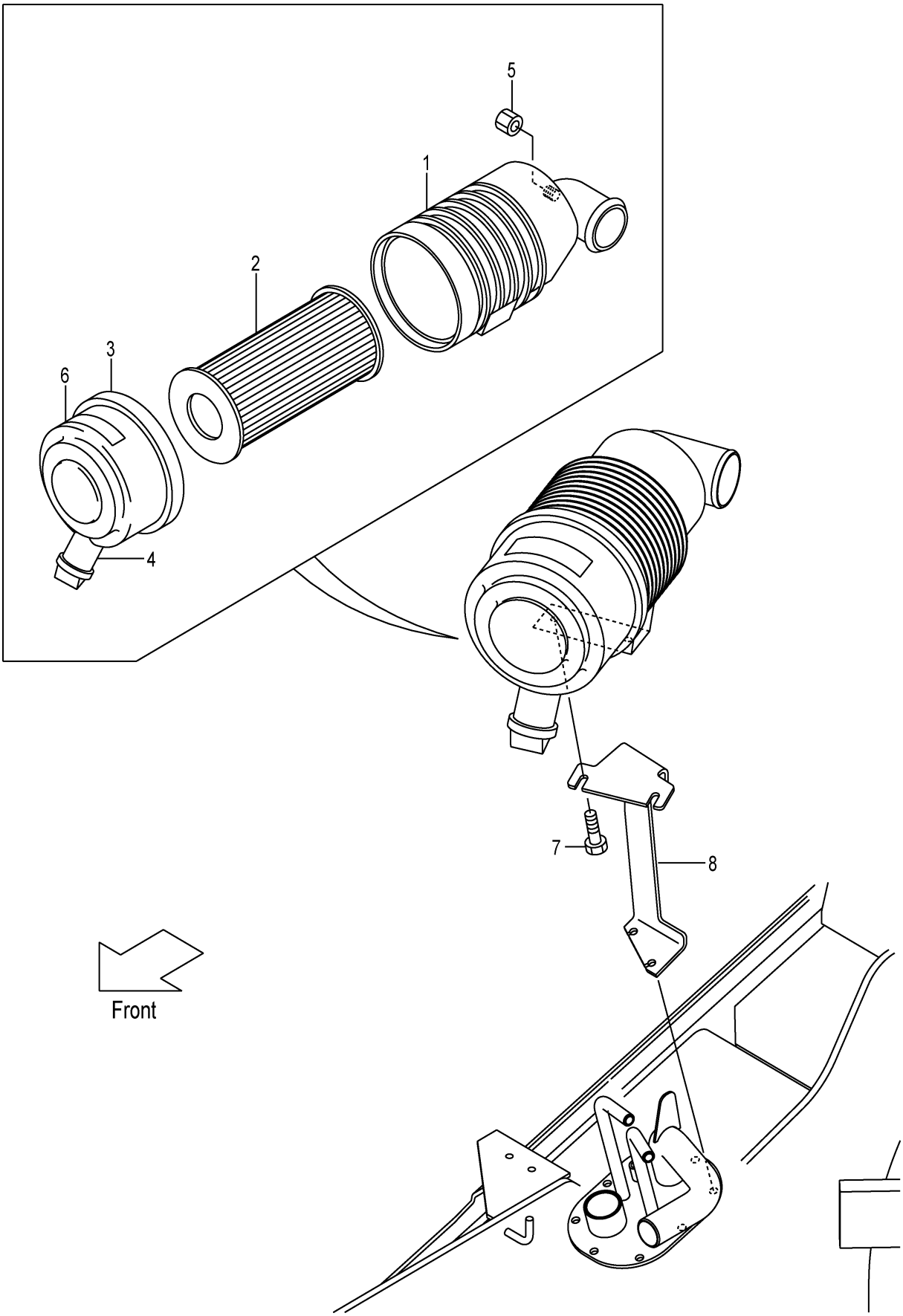

FIG.2

(F7C31040)

A:FD35T3S

Item No	Part No.	Mark	Description		Req'd	Remarks : Serial No.
A1	234A1-00101		CLEANER-ASSY,AIR	ｴｱｰｸﾘｰﾅｱｯｾﾝ	1	INC.1-6
1	234A1-00111		BODY	ﾎﾞﾃﾞｨ	1	
2	256G1-08011		ELEMENT,OUTER	ｴﾚﾒﾝﾄ	1	
3	256G1-08021		COVER	ｶﾊﾞｰ	1	
4	256A1-08031		VALVE,VACUATOR	ﾊﾞﾙﾌﾞ	1	
5	53651-12551		CAP,NIPPLE	ｷｬｯﾌﾟ	1	
6	234A1-00121		LABEL	ﾗﾍﾞﾙ	1	
7	01185-08016		BOLT	ﾎﾞﾙﾄ	2	
8	22N51-02002		BRACKET,AIR-CLEANER	ﾌﾞﾗｹｯﾄ	1	

FIG.3 AIR DUCT

(F7C31060) ｴｱｰﾀﾞｸﾄ

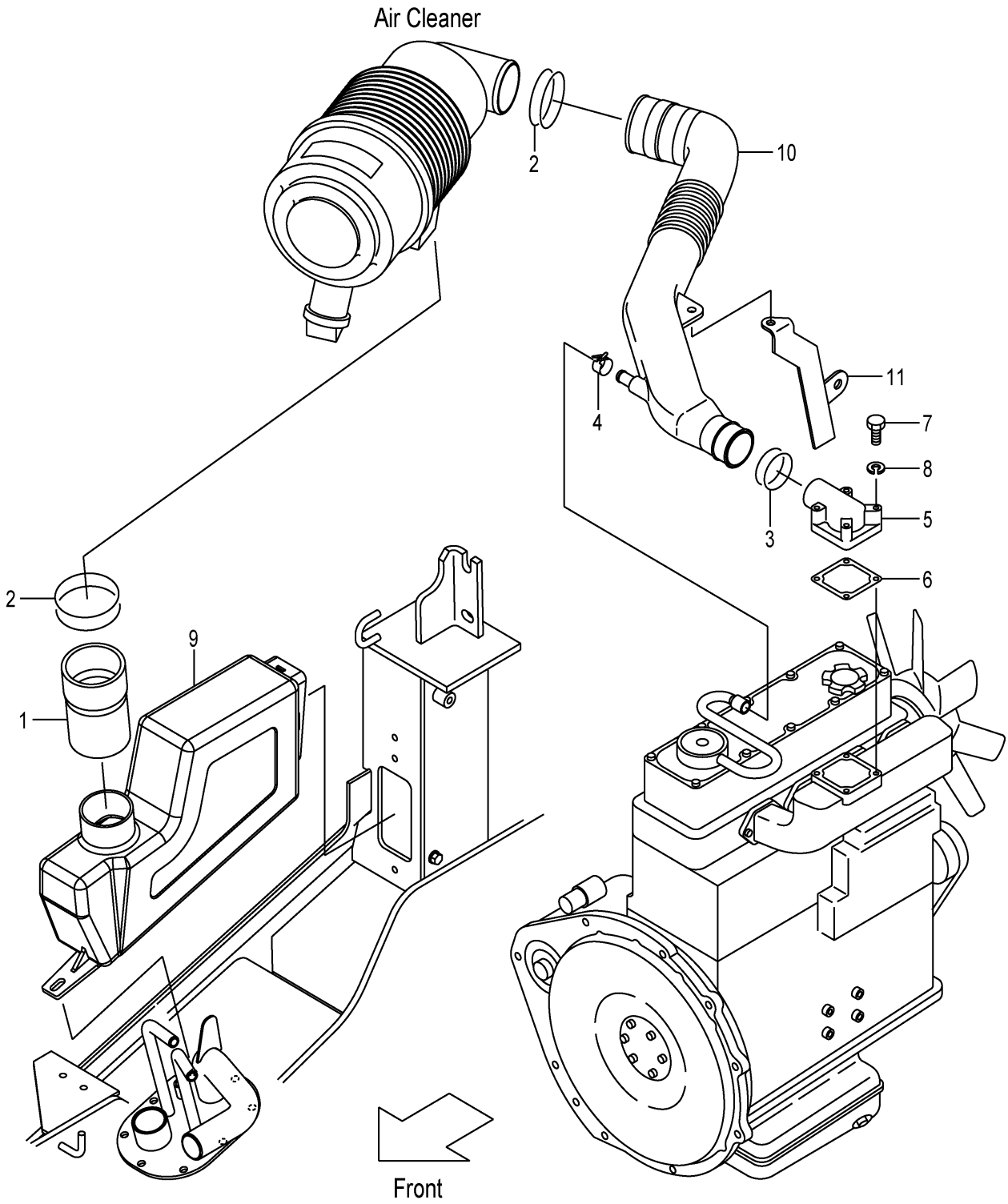

FIG.3

(F7C31060)

A:FD35T3S

Item No	Part No.	Mark	Description		Req'd	Remarks : Serial No.
1	22N51-02201		DUCT,AIR	ﾀﾞｸﾄ	1	
2	04911-00073		CLIP	ｸﾘｯﾌﾟ	2	
3	04911-00060		CLIP	ｸﾘｯﾌﾟ	1	
4	23652-22121		CLIP	ｸﾘｯﾌﾟ	1	
5	242F1-02111		INTAKE,AIR	ｲﾝﾃｰｸ	1	
6	242F1-02121		GASKET	ｶﾞｽｹｯﾄ	1	
7	01100-08065		BOLT	ﾎﾞﾙﾄ	4	
8	02010-00008		WASHER	ﾜｯｼｬ	4	
9	22N51-00602		RESONATOR	ﾚｿﾞﾈｰﾀ	1	
10	22N51-00301		HOSE,AIR-DUCT	ﾎｰｽ	1	
11	22N51-02251		BRACKET,INTAKE-DUCT	ﾌﾞﾗｹｯﾄ	1	

FIG.4 COOLING UNIT

(F7C32120) クーリング゛ユニット

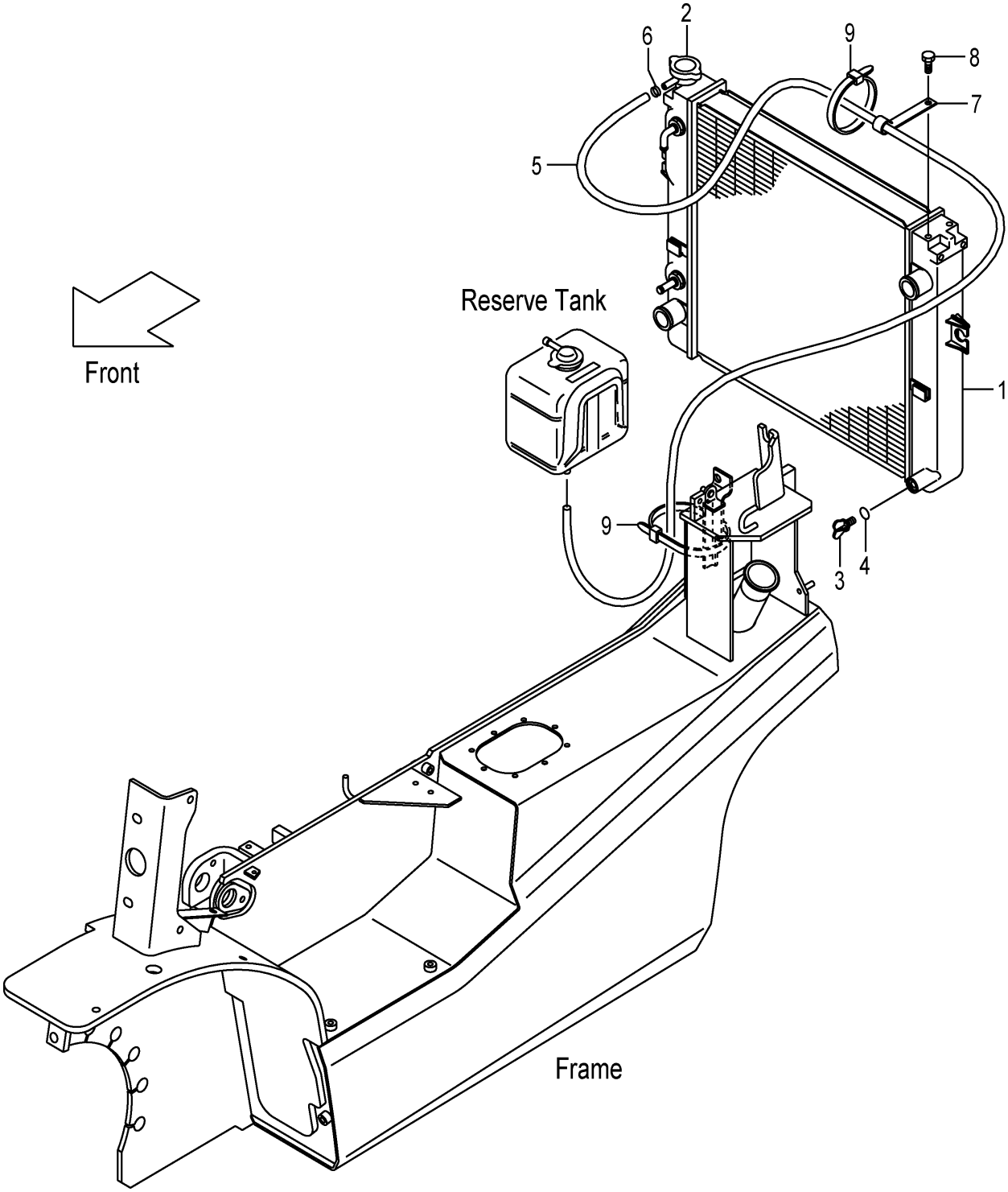

FIG.4

(F7C32120)

A:FD35T3S

Item No	Part No.	Mark	Description		Req'd	Remarks : Serial No.
A1	22Y52-10101		RADIATOR-ASSY	ﾗｼﾞｴｰﾀｱｯｾﾝ	1	INC.1-6
1	NO PART NO.	#	RADIATOR	ﾗｼﾞｴｰﾀ	1	
2	222A2-10211		CAP	ｷｬｯﾌﾟ	1	
3	234A2-12201		COCK	ｺｯｸ	1	
4	234A2-12211		O-RING	Oﾘﾝｸﾞ	1	
5	224W2-12541		HOSE	ﾎｰｽ	1	
6	23772-12071		CLIP	ｸﾘｯﾌﾟ	1	
7	22N55-42191		CLIP	ｸﾘｯﾌﾟ	1	
8	01185-08016		BOLT	ﾎﾞﾙﾄ	1	
9	29590-64501		BAND	ﾊﾞﾝﾄﾞ	2	

FIG.5 FAN SHROUD

(F7C32140) ﾌｧﾝｼｭﾗｳﾄﾞ

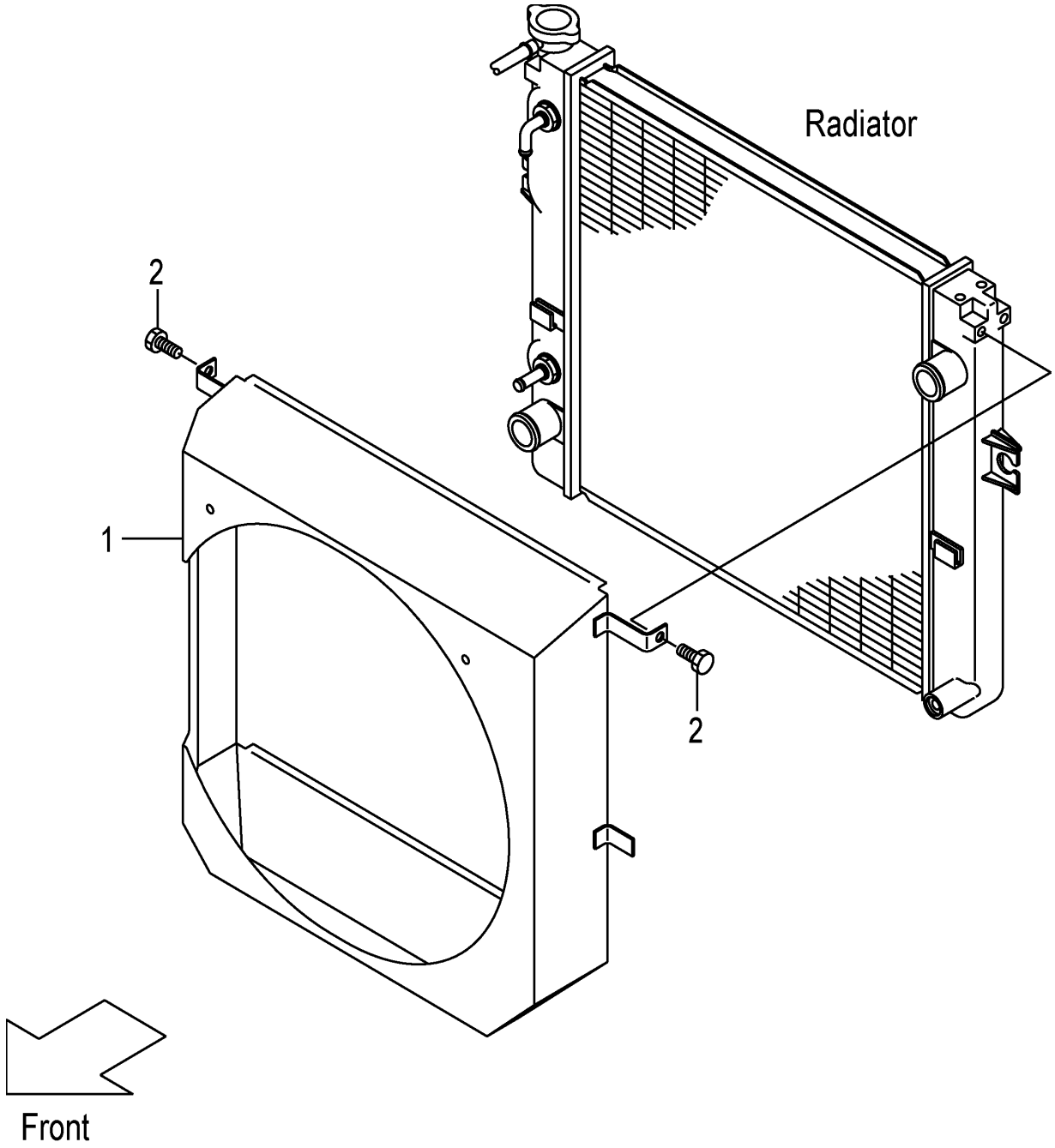

FIG.5

(F7C32140)

A:FD35T3S

Item No	Part No.	Mark	Description		Req'd	Remarks : Serial No.
1	22Y52-12301		SHROUD,FAN	ｼｭﾗｳﾄﾞ	1	
2	01185-08016		BOLT	ﾎﾞﾙﾄ	2	

FIG.6 RADIATOR PARTS & RESERVE TANK

(F7C32150) ﾗｼﾞｴｰﾀﾊﾟｰﾂ&ﾘｻﾞｰﾌﾞﾀﾝｸ

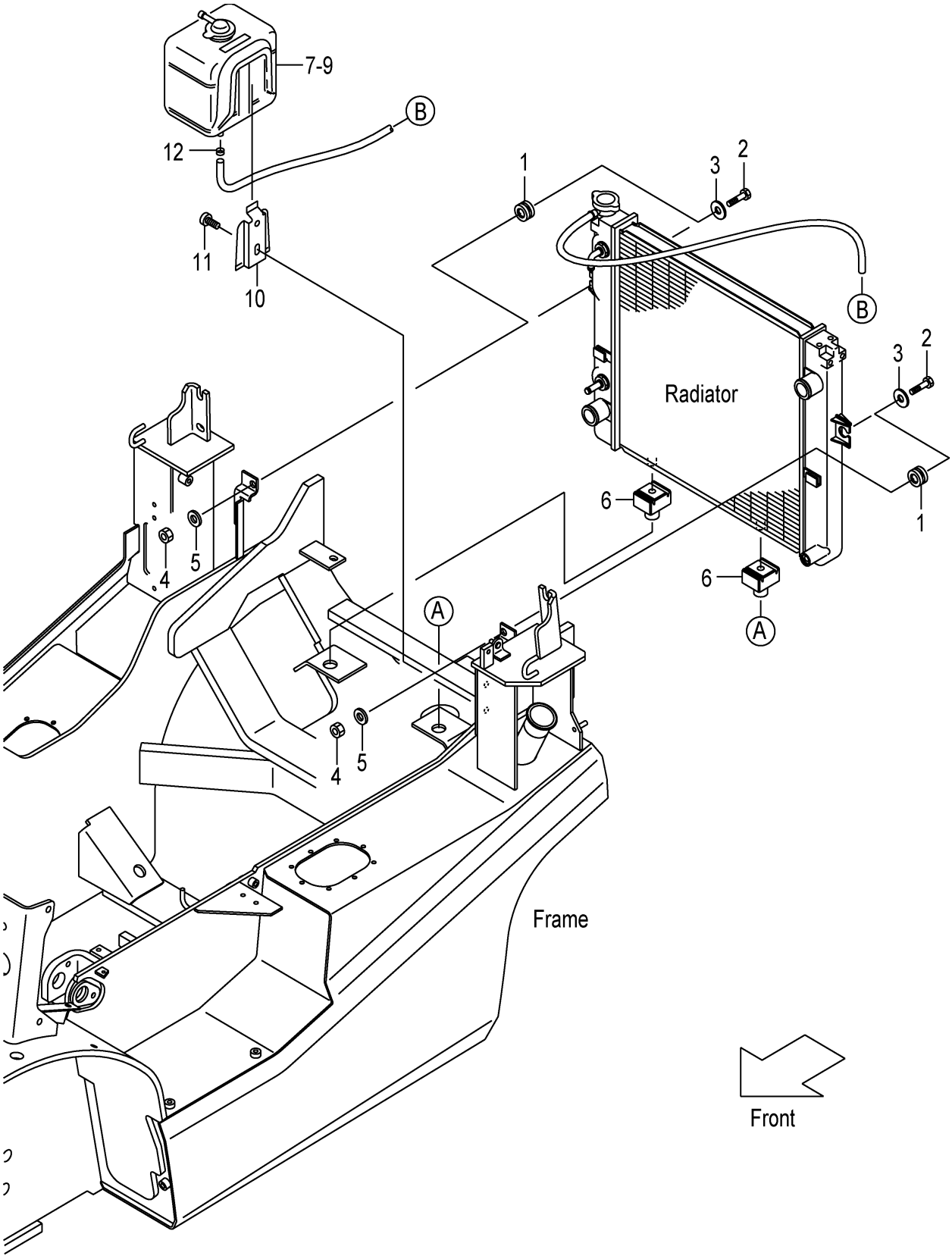

FIG.6

(F7C32150)

A:FD35T3S

Item No	Part No.	Mark	Description		Req'd	Remarks : Serial No.
1	214A2-12001		RUBBER	ﾗﾊﾞｰ	2	
2	214A2-12021		BOLT	ﾎﾞﾙﾄ	2	
3	22252-32251		WASHER	ﾜｯｼｬ	2	
4	23652-12051		NUT	ﾅｯﾄ	2	
5	02000-00010		WASHER	ﾜｯｼｬ	2	
6	239A2-12021		RUBBER	ﾗﾊﾞｰ	2	
7	214A2-12111		TANK,RESERVE	ﾀﾝｸ	1	INC.8,9
8	214A2-13001		CAP	ｷｬｯﾌﾟ	1	
9	214A2-13011		PACKING	ﾊﾟｯｷﾝｸﾞ	1	
10	214A2-12141		BRACKET	ﾌﾞﾗｹｯﾄ	1	
11	214A2-42611		SCREW	ｽｸﾘｭ	2	
12	214A2-12201		CLIP	ｸﾘｯﾌﾟ	1	

FIG.7 RADIATOR HOSE

(F7C32170) ﾗｼﾞｴｰﾀﾎｰｽ

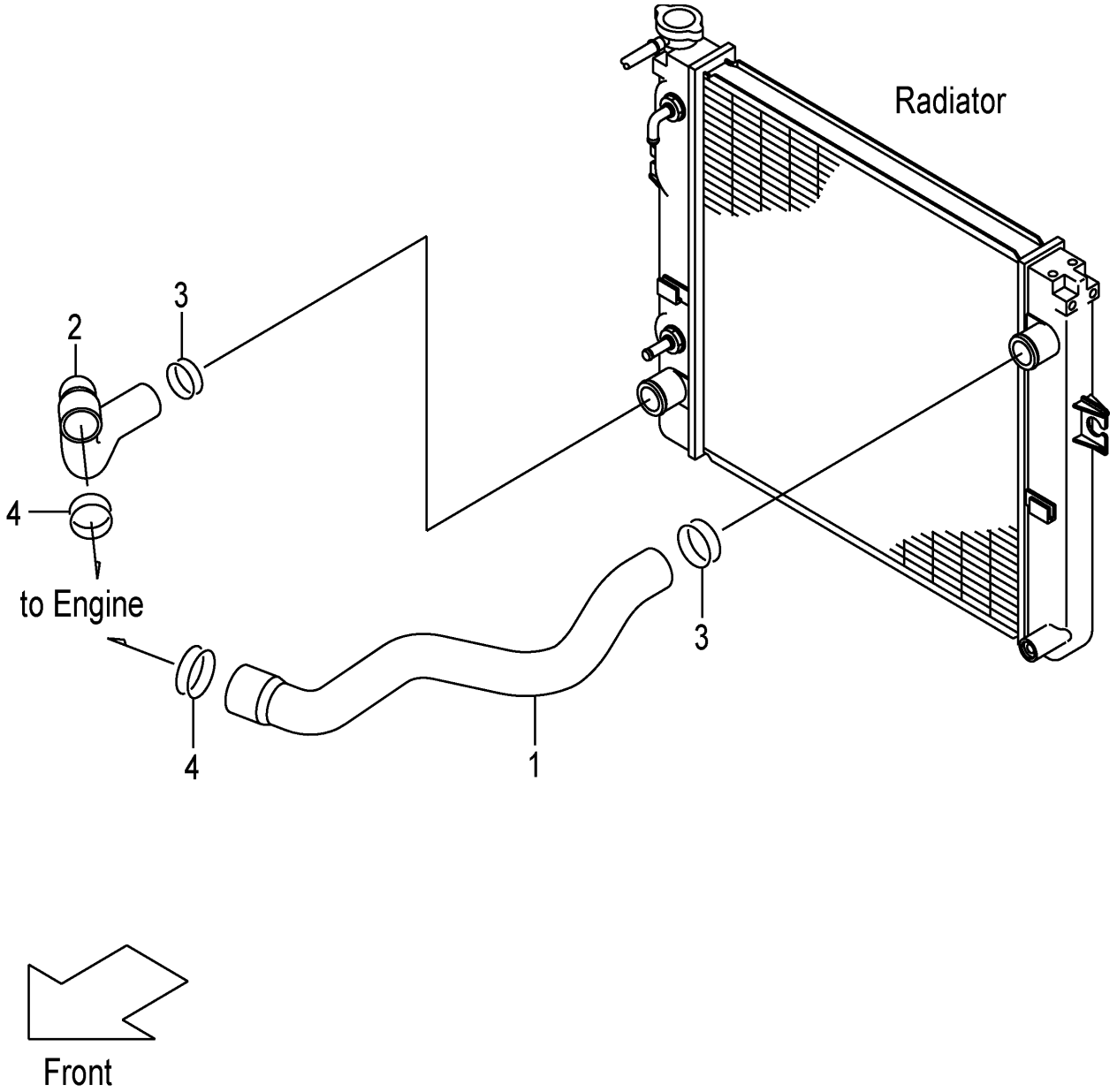

FIG.7

(F7C32170)

A:FD35T3S

Item No	Part No.	Mark	Description	Req'd	Remarks : Serial No.
1	22N52-12001		HOSE,UPPER ﾎｰｽ	1	
2	22N42-12051		HOSE,LOWER ﾎｰｽ	1	
3	04911-00044		CLIP ｸﾘｯﾌﾟ	2	
4	04911-00050		CLIP ｸﾘｯﾌﾟ	2	

FIG.8 FUEL SYSTEM

(F7C32220) フューエルシステム

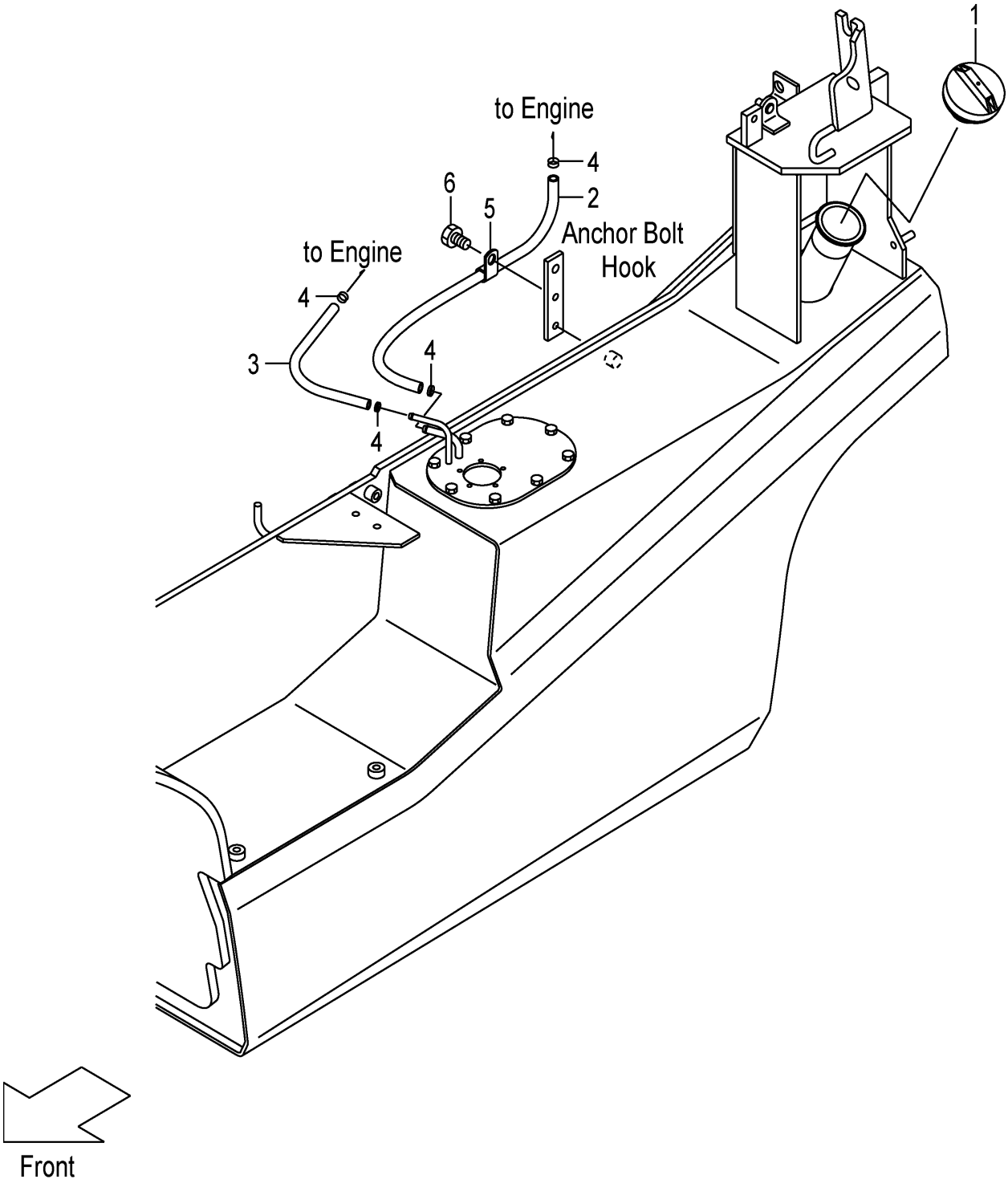

FIG.8

(F7C32220)

A:FD35T3S

Item No	Part No.	Mark	Description		Req'd	Remarks : Serial No.
1	216G2-22051		CAP,FUEL	ｷｬｯﾌﾟ	1	
2	251A2-22001		HOSE,FUEL	ﾎｰｽ	1	
3	25492-22001		HOSE,FUEL	ﾎｰｽ	1	
4	22192-22091		CLIP	ｸﾘｯﾌﾟ	4	
5	26602-42081		CLIP	ｸﾘｯﾌﾟ	1	
6	01185-08016		BOLT	ﾎﾞﾙﾄ	1	

FIG.9 EXHAUST SYSTEM

(F7C32320) エキゾーストシステム

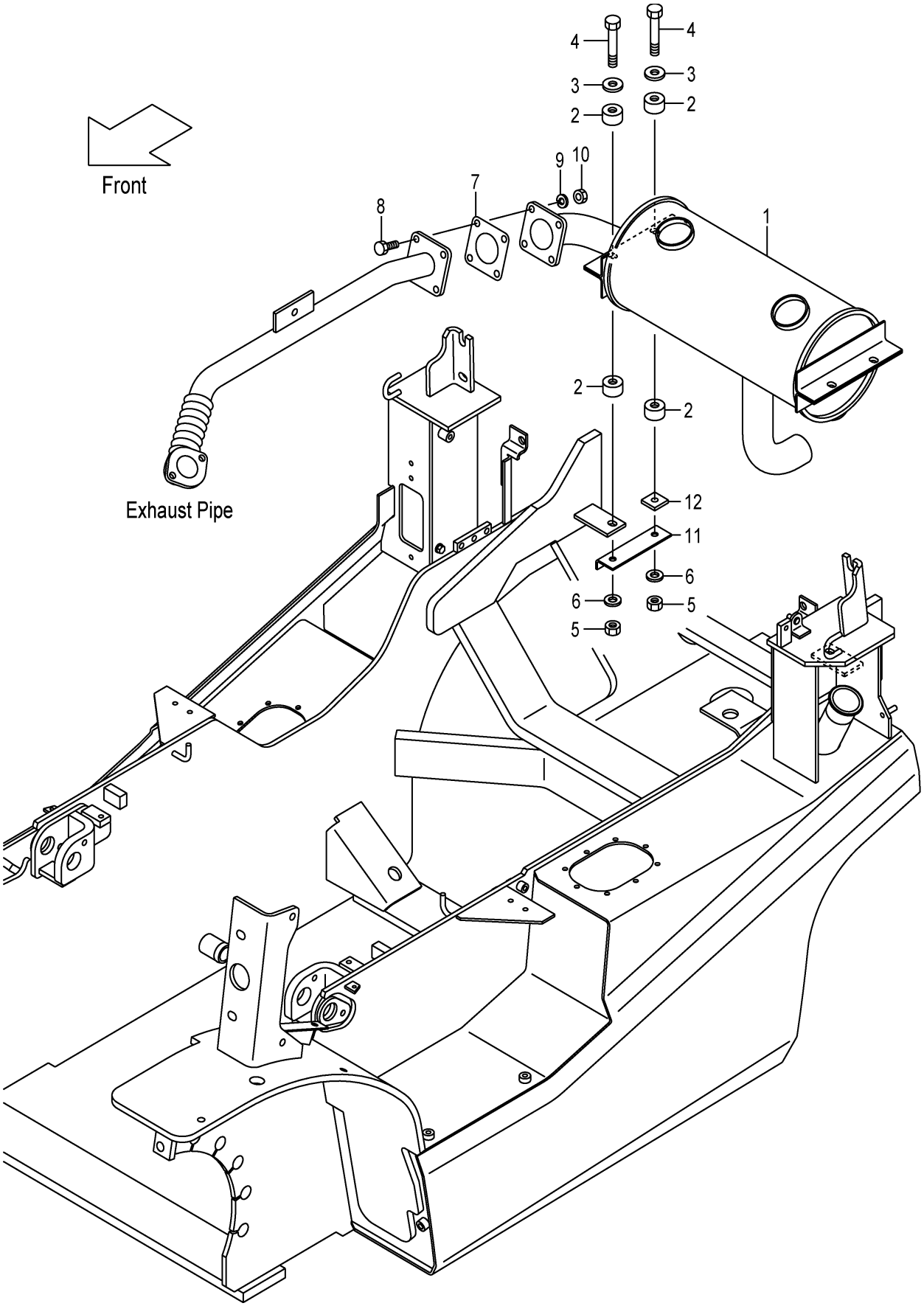

FIG.9

(F7C32320)

A:FD35T3S

Item No	Part No.	Mark	Description		Req'd	Remarks : Serial No.
1	22S92-30101		MUFFLER,3T	ﾏﾌﾗ	1	
2	22252-32241		RUBBER,CUSHION	ﾗﾊﾞｰ	8	
3	22252-32251		WASHER	ﾜｯｼｬ	4	
4	21232-32551		BOLT	ﾎﾞﾙﾄ	4	
5	23652-12051		NUT	ﾅｯﾄ	4	
6	02000-00010		WASHER	ﾜｯｼｬ	4	
7	22S52-32001		GASKET	ｶﾞｽｹｯﾄ	1	
8	01100-10030		BOLT	ﾎﾞﾙﾄ	4	
9	02010-00010		WASHER	ﾜｯｼｬ	4	
10	01400-00010		NUT	ﾅｯﾄ	4	
11	22S52-32321		ANGLE	ｱﾝｸﾞﾙ	2	
12	22S52-32331		PLATE	ﾌﾟﾚｰﾄ	2	

FIG.10 FRONT TUBE & JOINT

(F7C32380) フロントチューブ&ジョイント

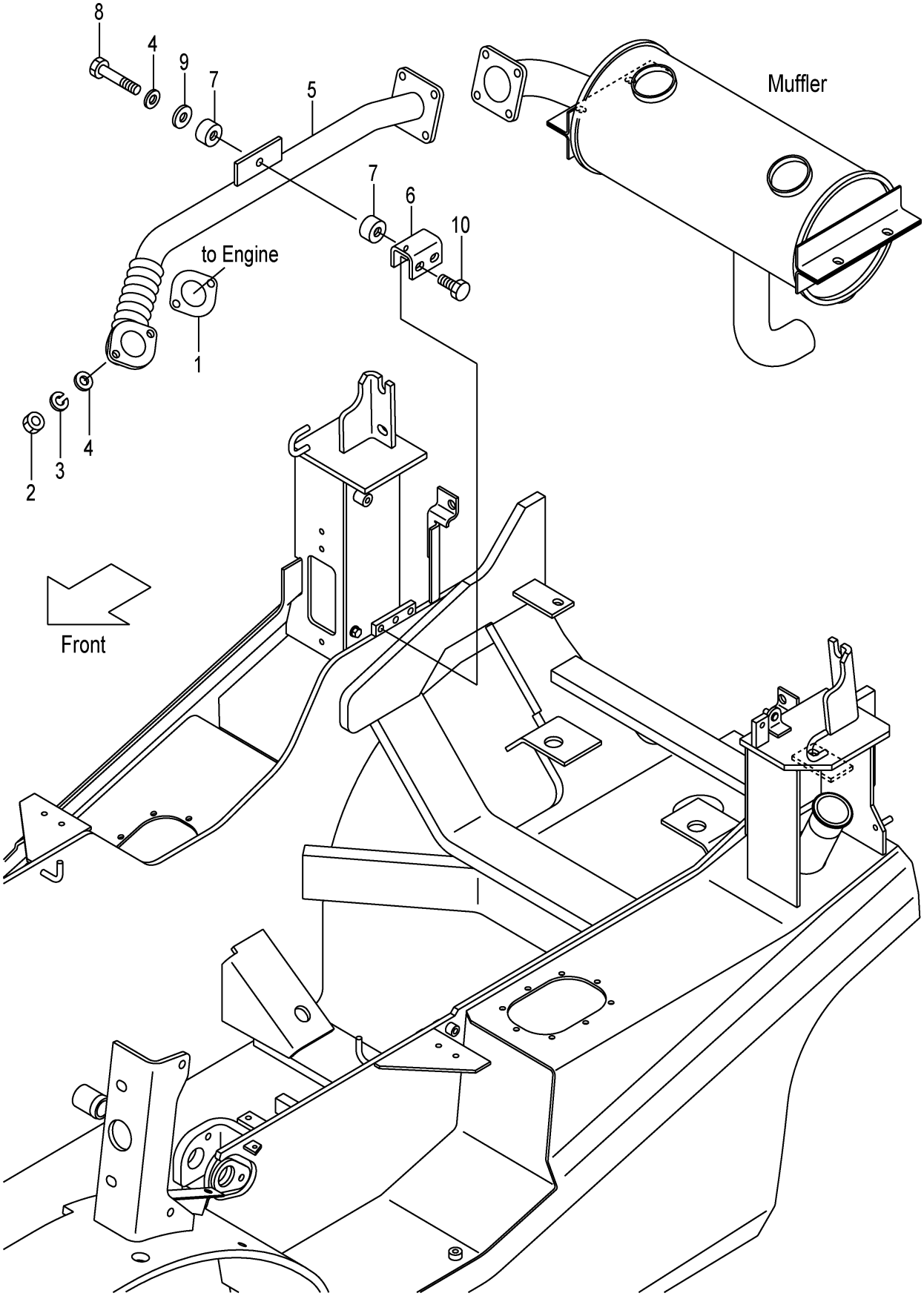

FIG.10

(F7C32380)

A:FD35T3S

Item No	Part No.	Mark	Description		Req'd	Remarks : Serial No.
1	22N92-32001		GASKET	ｶﾞｽｹｯﾄ	1	
2	01400-20010		NUT	ﾅｯﾄ	2	
3	02010-00010		WASHER	ﾜｯｼｬ	2	
4	02000-00010		WASHER	ﾜｯｼｬ	3	
5	22Y52-30301		PIPE,EXHAUST,QD32	ﾊﾟｲﾌﾟ	1	
6	22N52-32021		BRACKET	ﾌﾞﾗｹｯﾄ	1	
7	22252-32241		RUBBER,CUSHION	ﾗﾊﾞｰ	2	
8	21232-32551		BOLT	ﾎﾞﾙﾄ	1	
9	23451-02011		WASHER	ﾜｯｼｬ	1	
10	01186-10020		BOLT	ﾎﾞﾙﾄ	2	

FIG.11 COMBINATION METER

(F7C32410) コンビネーションメータ

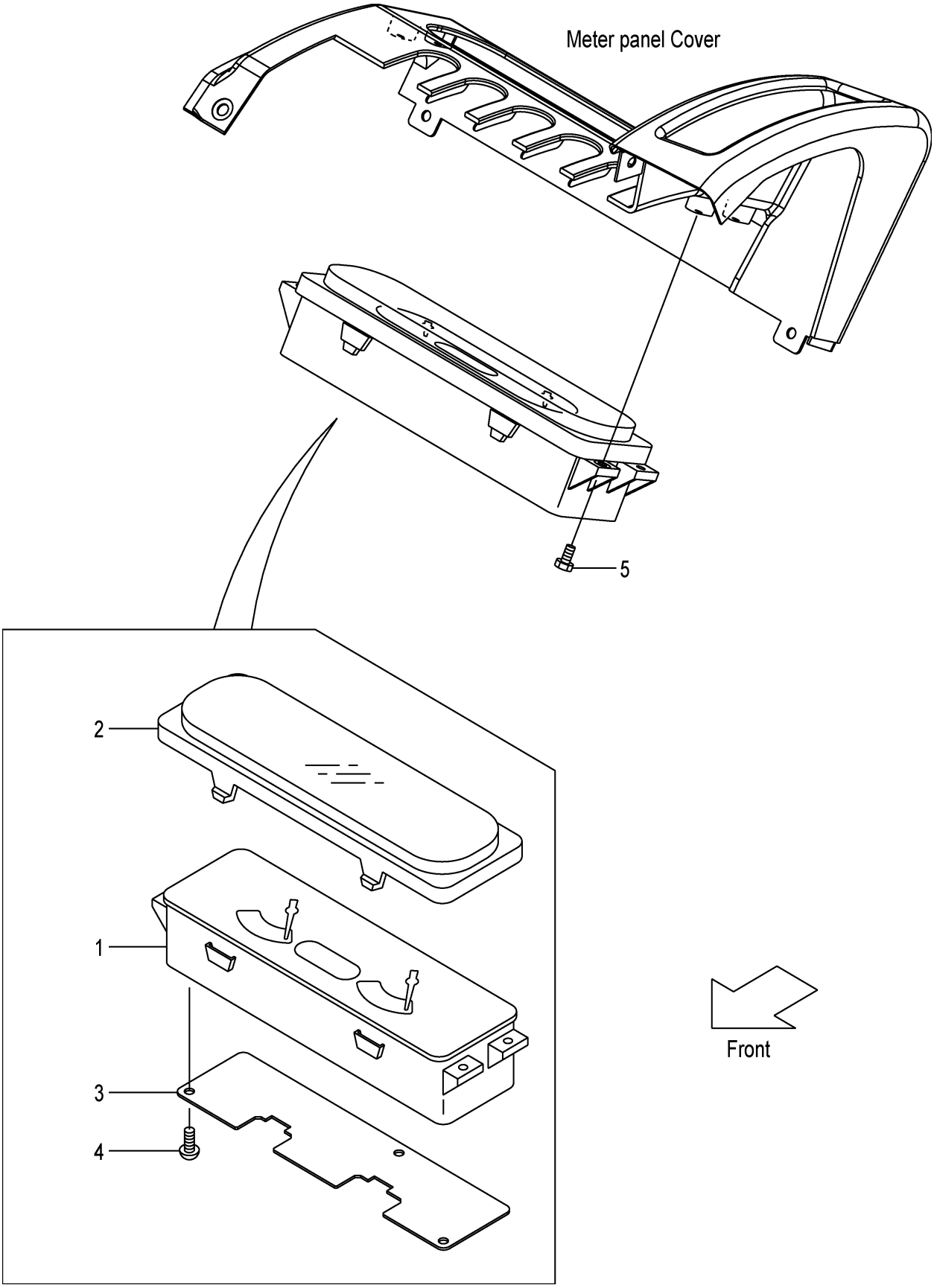

FIG.11

(F7C32410)

A:FD35T3S

Item No	Part No.	Mark	Description		Req'd	Remarks : Serial No.
A1	22N52-40301		METER-ASSY,COMBINATION		1	INC.1-4
				ｺﾝﾋﾞﾈｰｼｮﾝﾒｰﾀｱｯｾﾝ		
1	NO PART NO.	#	METER,COMBINATION	ﾒｰﾀ	1	
2	22N52-42501		COVER	ｶﾊﾞｰ	1	
3	22N52-42511		PLATE	ﾌﾟﾚｰﾄ	1	
4	01043-03010		SCREW	ｽｸﾘｭ	3	
5	01185-04012		BOLT	ﾎﾞﾙﾄ	4	

FIG.12 ENGINE WIRE HARNESS

(F7C324D0) ｴﾝｼﾞﾝﾜｲﾔﾊｰﾈｽ

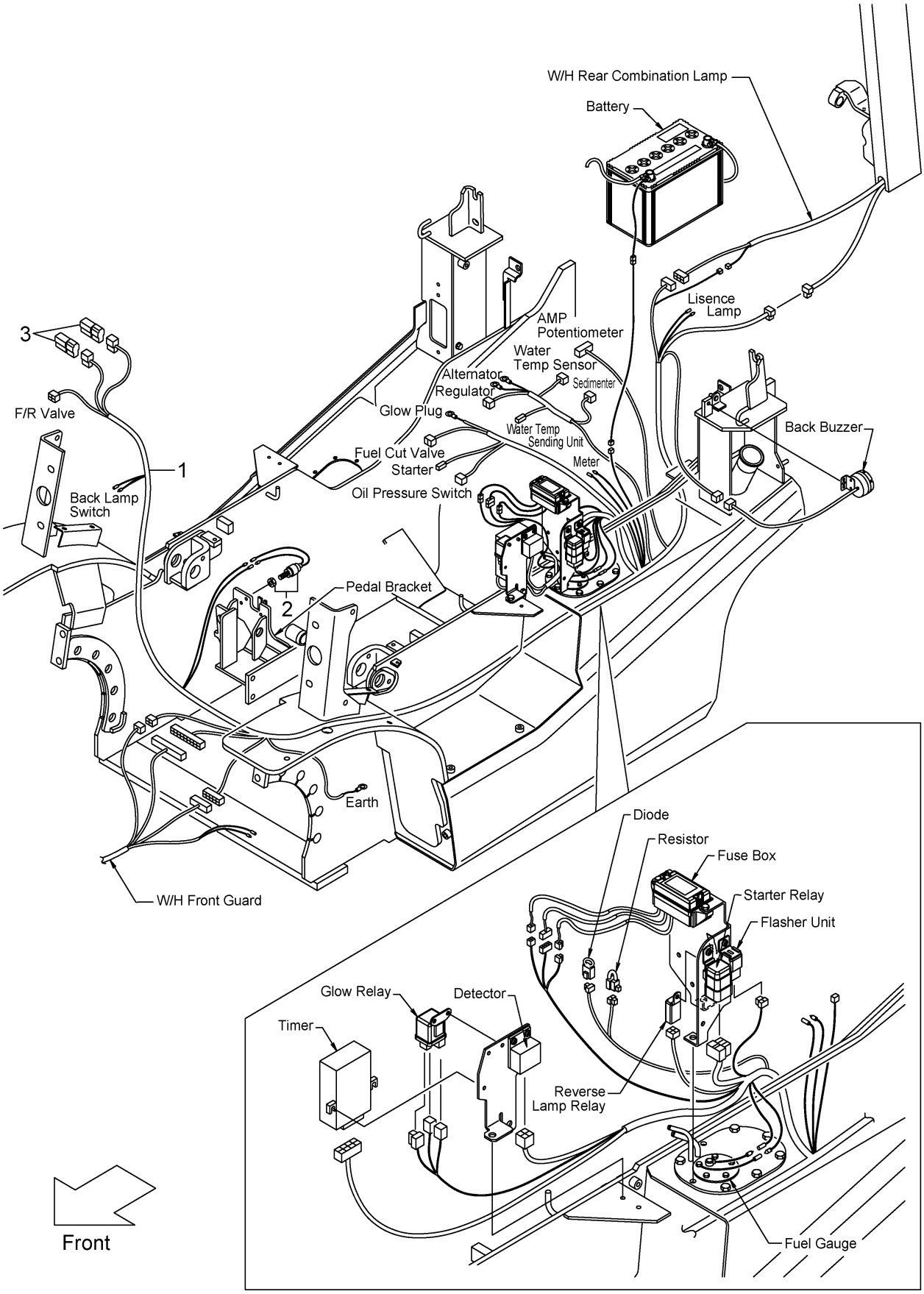

FIG.12

(F7C324D0)

A:FD35T3S

Item No	Part No.	Mark	Description	Req'd	Remarks : Serial No.
1	22N52-42213		WIRE-HARNESS,ENGINE ﾜｲﾔﾊｰﾈｽ	1	
2	23232-42072		SWITCH,STOP-LAMP ｽｲｯﾁ	1	
3	230C2-42201		DIODE,3A ﾀﾞｲｵｰﾄﾞ	2	

FIG.13 FRONT GUARD WIRE HARNESS

(F7C32430) フロントガードワイヤハーネス

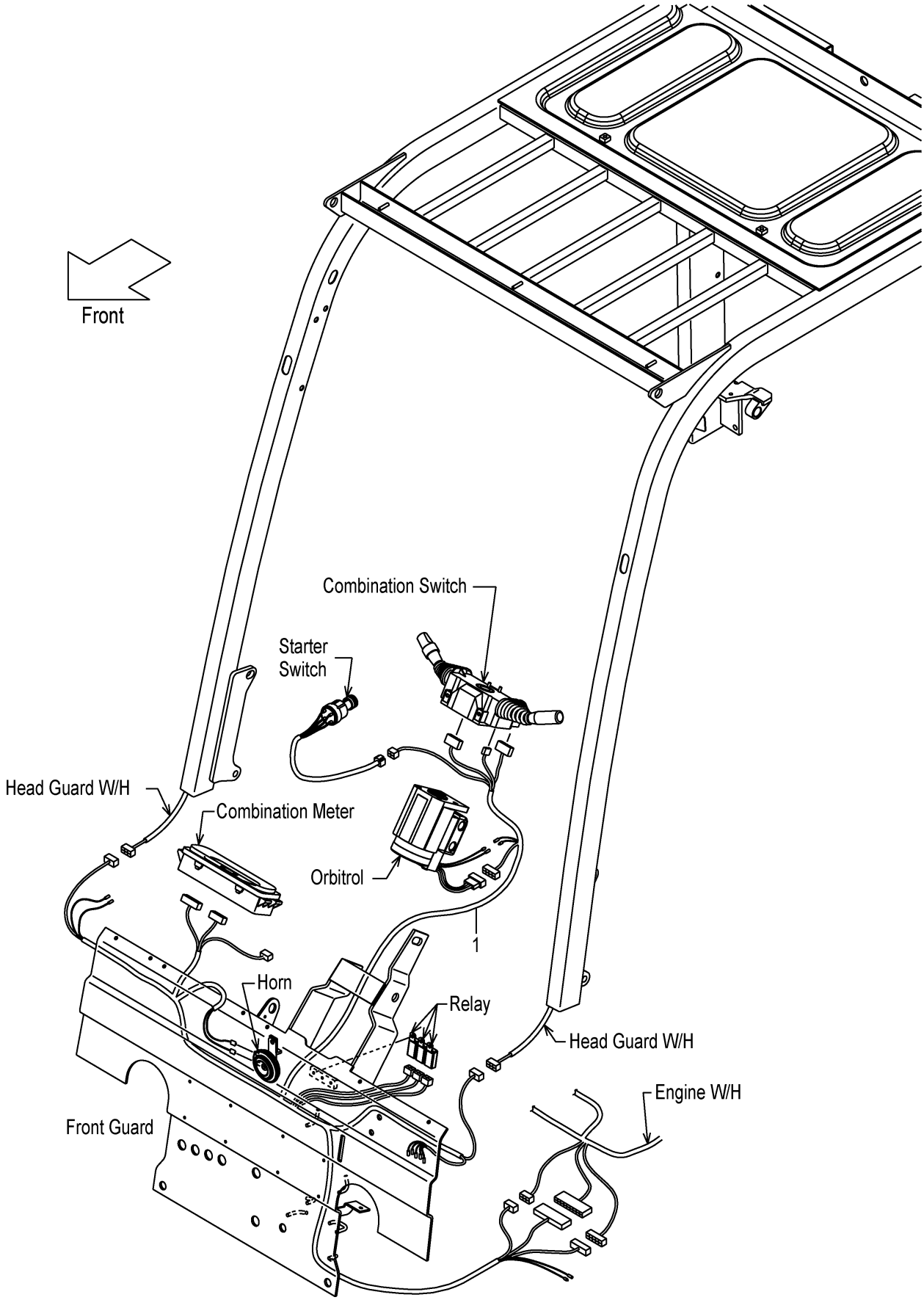

FIG.13

(F7C32430)

A:FD35T3S

Item No	Part No.	Mark	Description	Req'd	Remarks : Serial No.
1	22N52-42201		WIRE-HARNESS,F.GUARD ﾜｲﾔﾊｰﾈｽ	1	

FIG.14 COMBINATION SWITCH

(F7C32450) コンビネーションスイッチ

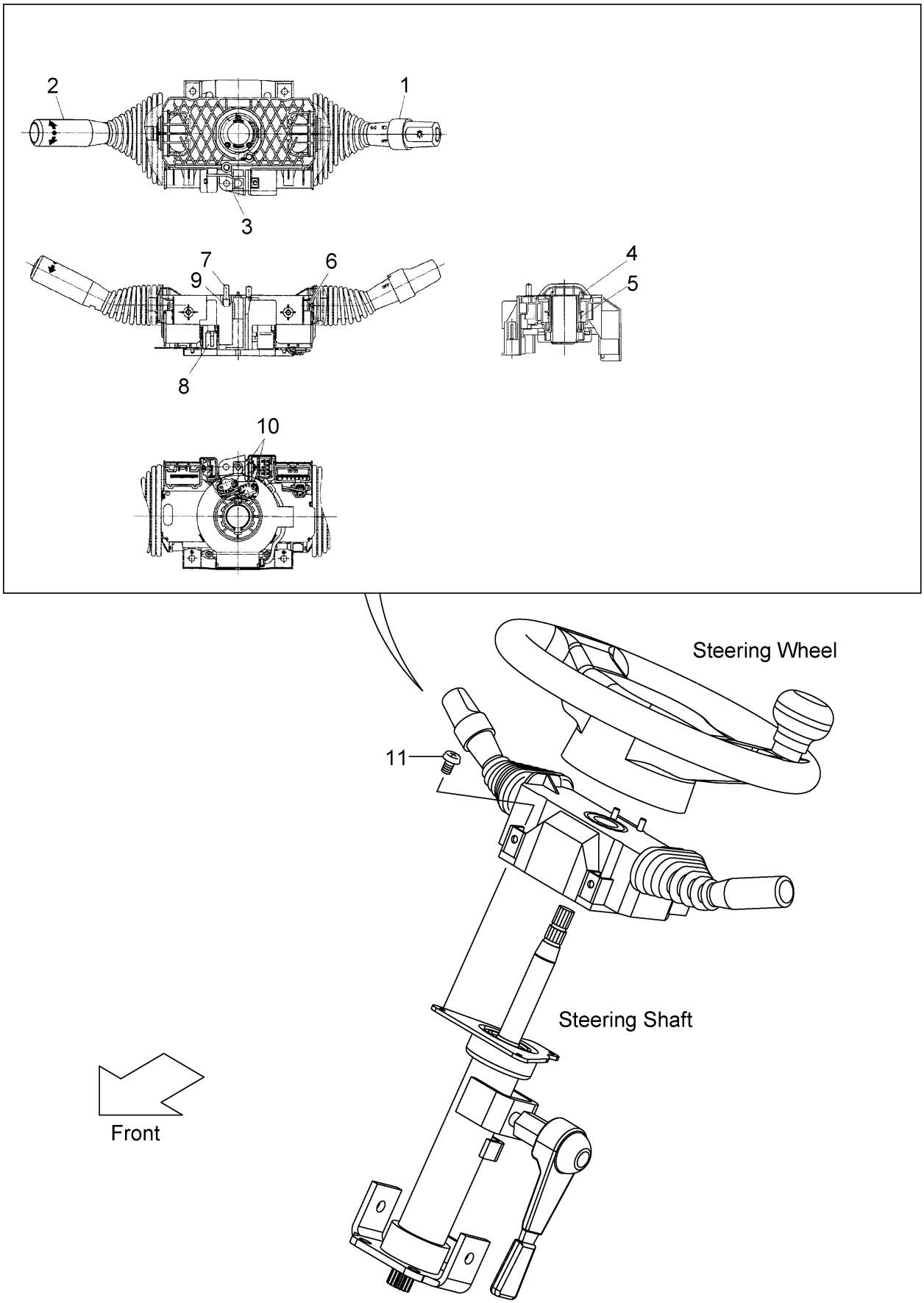

FIG.14

(F7C32450)

A:FD35T3S

Item No	Part No.	Mark	Description		Req'd	Remarks : Serial No.
A1	209K2-40501		SWITCH-ASSY,COMBINATION		1	INC.1-10
				ｺﾝﾋﾞﾈｰｼｮﾝｽｲｯﾁｱｯｾﾝ		
1	280C2-42331		SWITCH,TURN-SIGNAL	ｽｲｯﾁ	1	
2	280C2-42341		SWITCH,DIRECTION	ｽｲｯﾁ	1	
3	NO PART NO.	#	BODY	ﾎﾞﾃﾞｨ	1	
4	NO PART NO.	#	CAM,CANCEL,RH	ｶﾑ	1	
5	NO PART NO.	#	SPRING	ｽﾌﾟﾘﾝｸﾞ	1	
6	NO PART NO.	#	SCREW	ｽｸﾘｭ	4	
7	280C2-42351		CONTACT,HORN	ｺﾝﾀｸﾄ	2	
8	NO PART NO.	#	CODE,CP-HORN	ｺｰﾄﾞ	1	
9	NO PART NO.	#	SPRING	ｽﾌﾟﾘﾝｸﾞ	2	
10	NO PART NO.	#	SCREW	ｽｸﾘｭ	2	
11	01033-05014		SCREW	ｽｸﾘｭ	3	

FIG.15 ELECTRIC PARTS

(F7C32490) エレクトリックパーツ

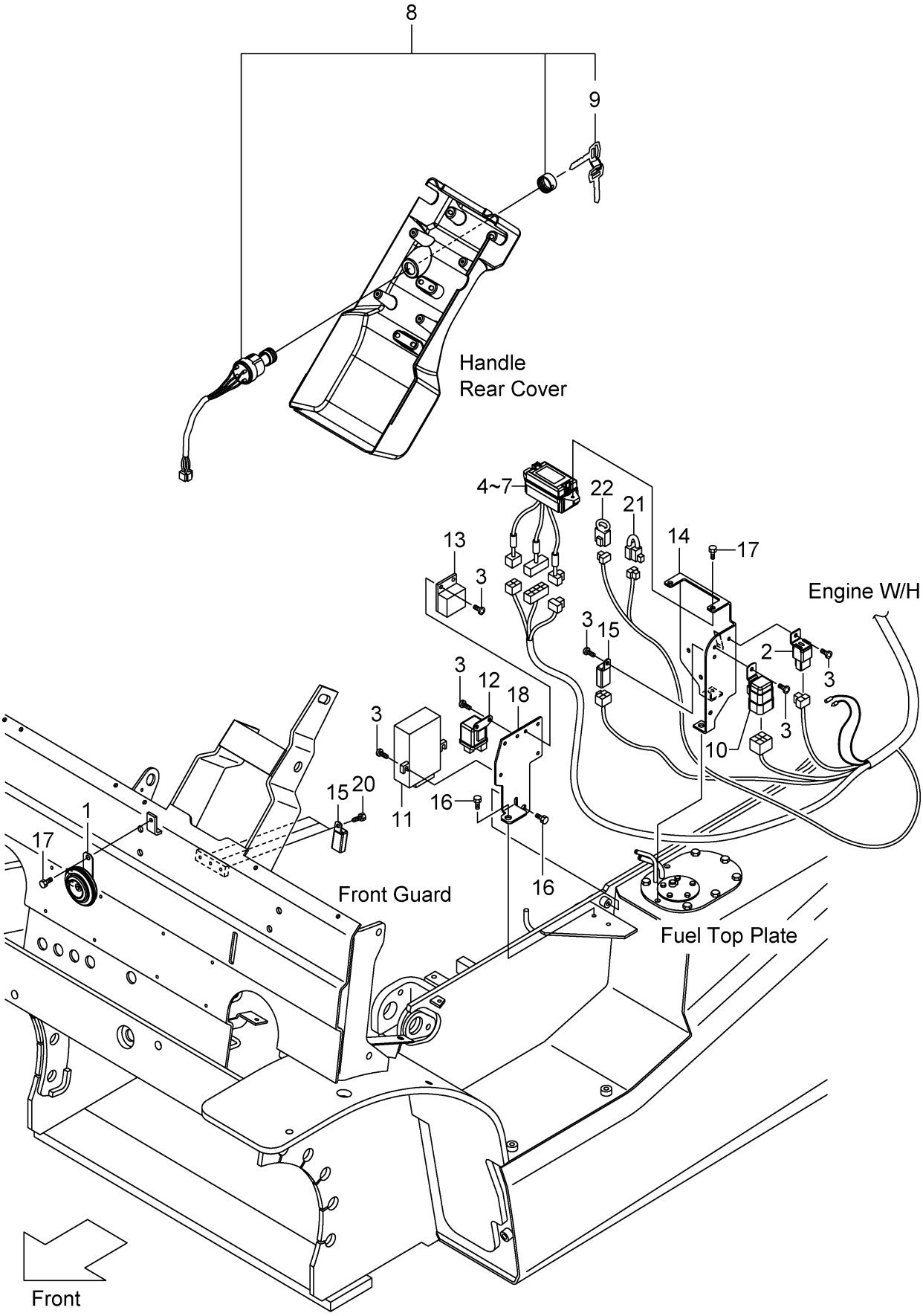

FIG.15

(F7C32490)

A:FD35T3S

Item No	Part No.	Mark	Description		Req'd	Remarks : Serial No.
1	216G2-43651		HORN	ﾎｰﾝ	1	
2	216G2-43711		UNIT,FLASHER	ﾕﾆｯﾄ	1	
3	214A2-42611		SCREW	ｽｸﾘｭ	9	
4	22N52-42102		BOX,FUSE	ﾎﾞｯｸｽ	1	INC.5-7
5	22N52-42311		FUSE,3A	ﾋｭｰｽﾞ	4	
6	22N52-42321		FUSE,7.5A	ﾋｭｰｽﾞ	6	
7	22N52-42331		FUSE,15A	ﾋｭｰｽﾞ	3	
8	216G2-42311		SWITCH,STARTER	ｽｲｯﾁ	1	INC.9
9	216G2-43401		KEY,SPARE,511323	ｷｰ	1	(1SET=2PCS)
-	216G2-43411		KEY,SPARE,512421	ｷｰ	(1)	(1SET=2PCS)
-	216G2-43421		KEY,SPARE,513454	ｷｰ	(1)	(1SET=2PCS)
10	216G2-42321		RELAY,STARTER	ﾘﾚｰ	1	
11	242F2-42301		TIMER,QGS-CONTROLLER	ﾀｲﾏ	1	
12	242F2-42311		RELAY,GLOW-PLUG	ﾘﾚｰ	1	
13	242F2-42321		DETECTOR	ﾃﾞｨﾃｸﾀ	1	
14	22N52-42021		BRACKET,ELECTRIC	ﾌﾞﾗｹｯﾄ	1	
15	209K2-42351		RELAY,1A	ﾘﾚｰ	4	
16	01185-08016		BOLT	ﾎﾞﾙﾄ	3	
17	01185-06016		BOLT	ﾎﾞﾙﾄ	2	
18	22N52-42031		BRACKET,ELECTRIC	ﾌﾞﾗｹｯﾄ	1	
19	04913-10200	+	BAND	ﾊﾞﾝﾄﾞ	4	
20	01183-06010		BOLT	ﾎﾞﾙﾄ	3	
21	22N52-43001		RESISTOR	ﾚｼﾞｽﾀ	1	
22	21152-42091		DIODE	ﾀﾞｲｵｰﾄﾞ	1	

FIG.16 BATTERY

(F7C324F0) ﾊﾞｯﾃﾘ

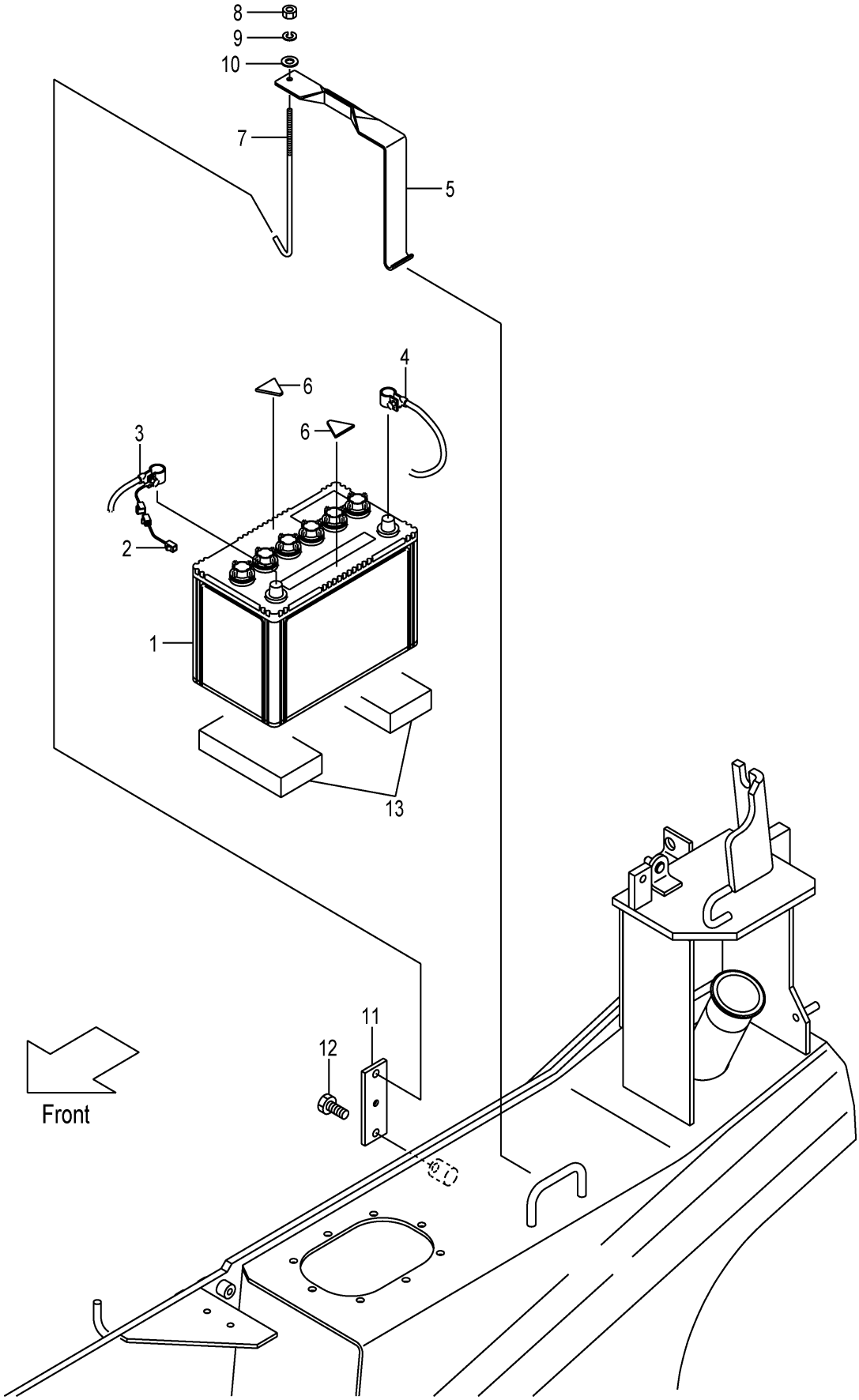

FIG.16

(F7C324F0)

A:FD35T3S

Item No	Part No.	Mark	Description		Req'd	Remarks : Serial No.
1	230C2-42301		BATTERY,WET,95D31R	ﾊﾞｯﾃﾘ	1	
2	25592-42081		WIRE,FUSIBLE-LINK	ﾜｲﾔ	1	
3	242F2-42151		CABLE,BATTERY(+)	ｹｰﾌﾞﾙ	1	
4	238A2-42151		CABLE,BATTERY(-)	ｹｰﾌﾞﾙ	1	
5	217G2-42021		HOLDER,BATTERY	ﾎﾙﾀﾞ	1	
6	216G2-43111		RUBBER	ﾗﾊﾞｰ	2	
7	256C2-42231		BOLT,ANCHOR	ﾎﾞﾙﾄ	1	
8	01400-00006		NUT	ﾅｯﾄ	1	
9	02010-00006		WASHER	ﾜｯｼｬ	1	
10	02000-00006		WASHER	ﾜｯｼｬ	1	
11	22N52-42111		HOOK,ANCHOR-BOLT	ﾌｯｸ	1	
12	01185-08016		BOLT	ﾎﾞﾙﾄ	1	
13	22N52-42301		RUBBER	ﾗﾊﾞｰ	2	

FIG.17 HEAD LAMP & FRONT COMBINATION LAMP

(F7C324G0) ﾍｯﾄﾞﾗﾝﾌﾟ＆ﾌﾛﾝﾄｺﾝﾋﾞﾈｰｼｮﾝﾗﾝﾌﾟ

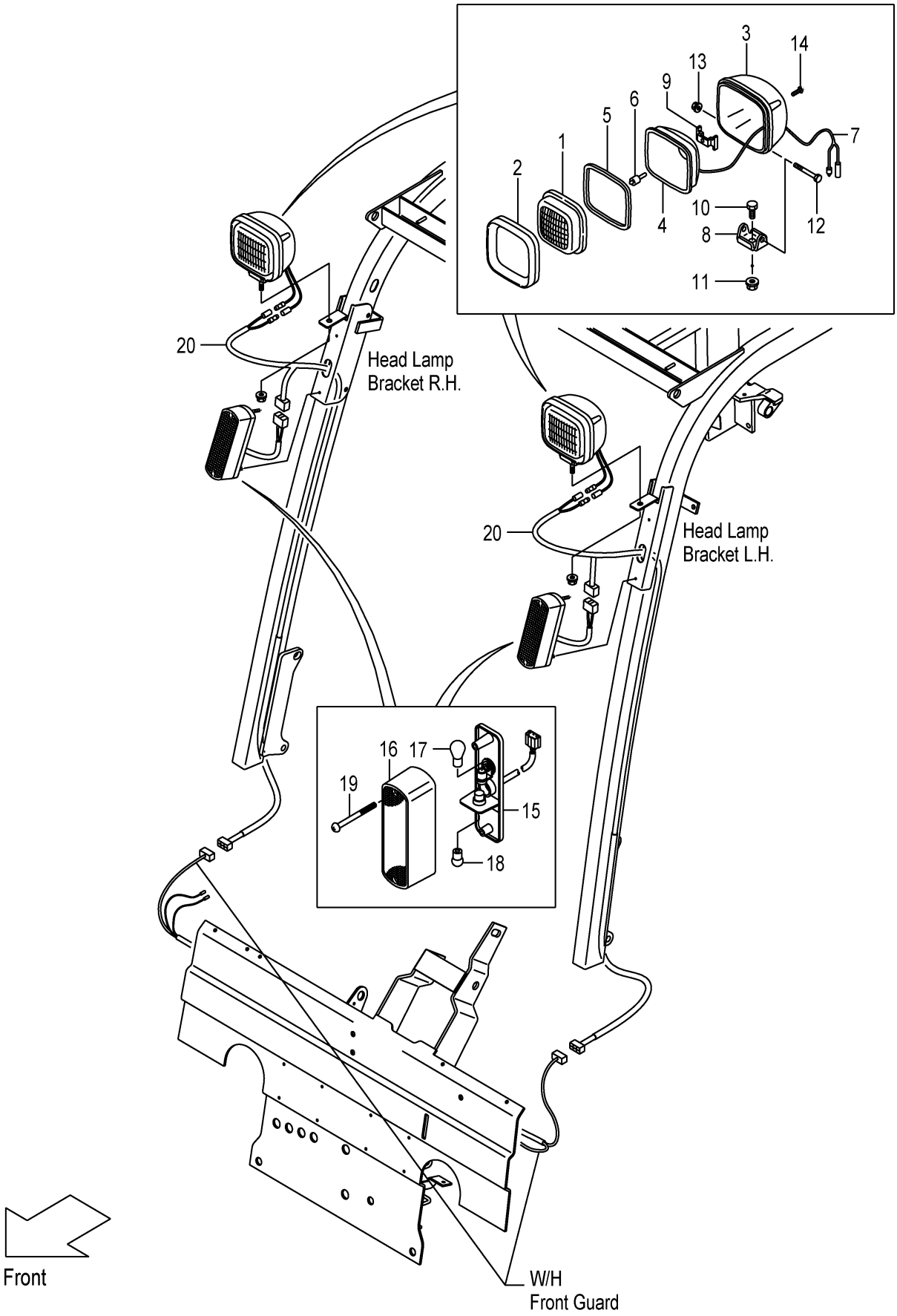

FIG.17
(F7C324G0)

A:FD35T3S

Item No	Part No.	Mark	Description		Req'd	Remarks : Serial No.
A1	216G2-40602		LAMP-ASSY,HEAD	ﾍｯﾄﾞﾗﾝﾌﾟｱｯｾﾝ	2	INC.1-14
1	235C2-42131		LENS	ﾚﾝｽﾞ	2	
2	235C2-42141		RIM	ﾘﾑ	2	
3	NO PART NO.	#	HOUSING	ﾊｳｼﾞﾝｸﾞ	2	
4	NO PART NO.	#	REFLECTOR	ﾘﾌﾚｸﾀ	2	
5	216G2-43531		GASKET	ｶﾞｽｹｯﾄ	2	
6	216G2-43542		BULB,12V/55W	ﾊﾞﾙﾌﾞ	2	
7	NO PART NO.	#	WIRE,LEAD	ﾜｲﾔ	2	
8	NO PART NO.	#	BRACKET	ﾌﾞﾗｹｯﾄ	2	
9	216G2-43571		SPRING	ｽﾌﾟﾘﾝｸﾞ	2	
10	01100-08020		BOLT	ﾎﾞﾙﾄ	2	
11	216G2-43592		NUT	ﾅｯﾄ	2	
12	01100-06050		BOLT	ﾎﾞﾙﾄ	2	
13	216G2-43611		NUT	ﾅｯﾄ	2	
14	01030-04018		SCREW	ｽｸﾘｭ	8	
A2	216G2-40701		LAMP-ASSY,F-COMBINATION	ﾌﾛﾝﾄｺﾝﾋﾞﾈｰｼｮﾝﾗﾝﾌﾟｱｯｾﾝ	2	INC.15-19
15	NO PART NO.	#	BODY	ﾎﾞﾃﾞｨ	2	
16	216G2-40731		LENS	ﾚﾝｽﾞ	2	
17	216G2-40711		BULB,12V/27W	ﾊﾞﾙﾌﾞ	2	
18	216G2-40721		BULB,12V/10W	ﾊﾞﾙﾌﾞ	2	
19	NO PART NO.		SCREW	ｽｸﾘｭ	4	
20	239A2-42221		WIRE-HARNESS,H.GUARD	ﾜｲﾔﾊｰﾈｽ	2	

FIG.18 REAR COMBINATION LAMP

(F7C324H0) ﾘﾔｰｺﾝﾋﾞﾈｰｼｮﾝﾗﾝﾌﾟ

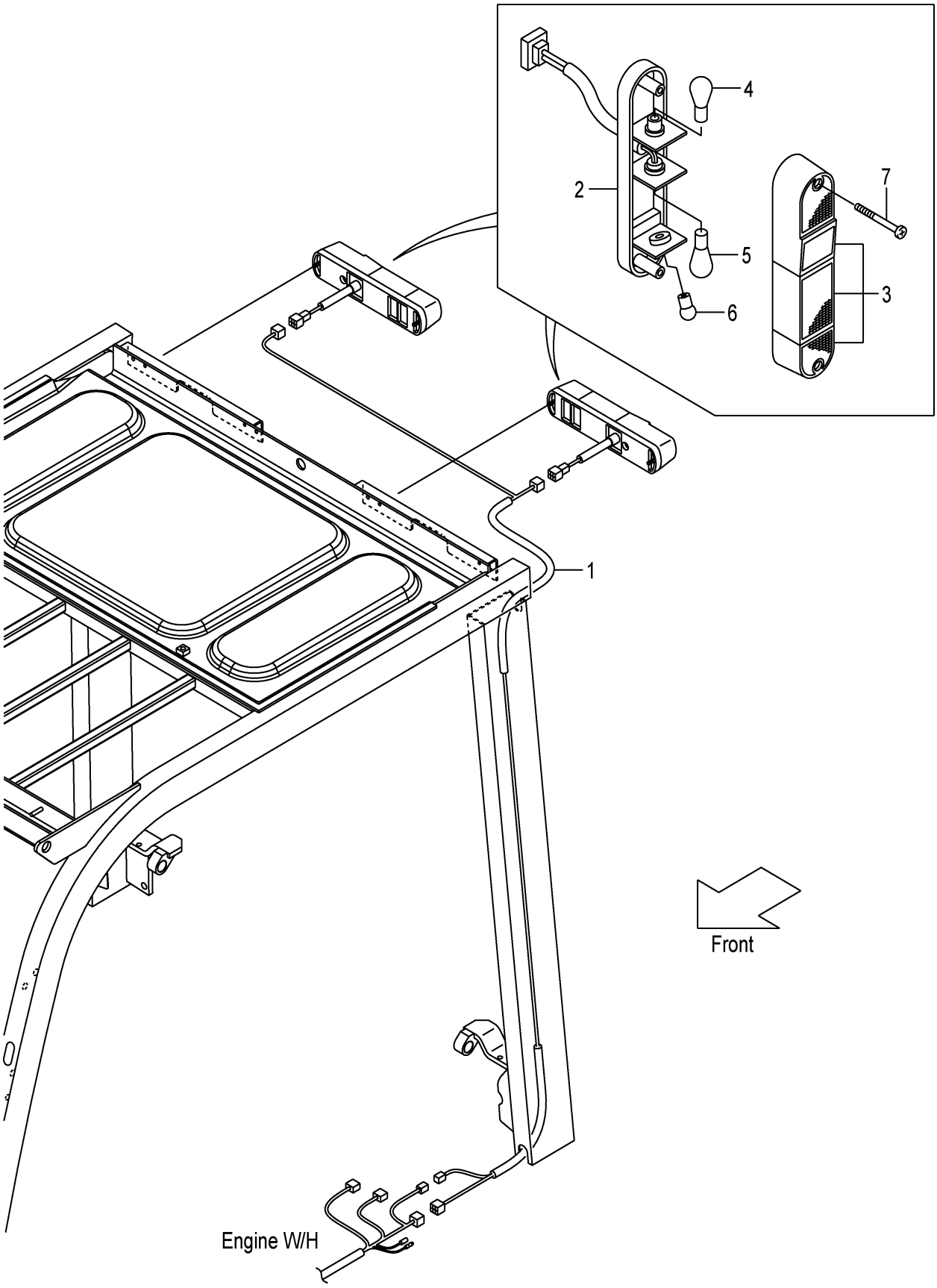

FIG.18

(F7C324H0)

A:FD35T3S

Item No	Part No.	Mark	Description	Req'd	Remarks : Serial No.
1	22N52-42251		WIRE-HARNESS,R-COMBINATION ﾜｲﾔﾊｰﾈｽ	1	
A1	209K2-42002		LAMP-ASSY,R-COMBINATION ﾘﾔｰｺﾝﾋﾞﾈｰｼｮﾝﾗﾝﾌﾟｱｯｾﾝ	2	INC.2-7
2	NO PART NO.	#	BODY ﾎﾞﾃﾞｨ	2	
3	209K2-42021		LENS,PLASTIC ﾚﾝｽﾞ	2	
4	214A2-44501		BULB,12V/23,8W ﾊﾞﾙﾌﾞ	2	
5	209K2-42041		BULB,12V/27W ﾊﾞﾙﾌﾞ	2	
6	210F2-42031		BULB,12V/10W ﾊﾞﾙﾌﾞ	2	
7	01030-05055		SCREW ｽｸﾘｭ	4	

FIG.19 BACK BUZZER

(F7C324X0) ﾊﾞｯｸﾌﾞｻﾞｰ

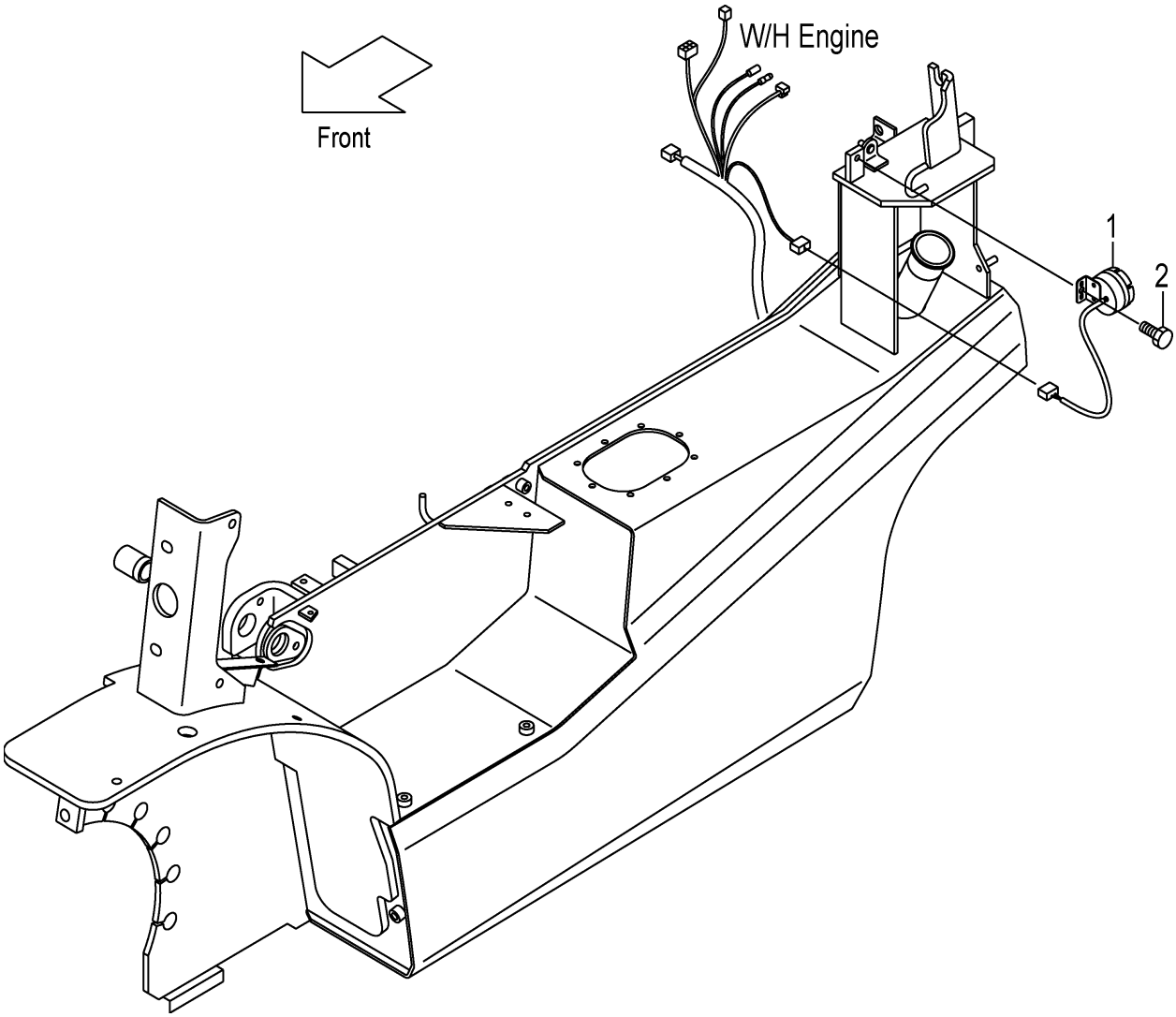

FIG.19

(F7C324X0)

A:FD35T3S

Item No	Part No.	Mark	Description	Req'd	Remarks : Serial No.
1	234A2-42301		BUZZER,BACK,12V ﾌﾞｻﾞｰ	1	
2	01183-08012		BOLT ﾎﾞﾙﾄ	1	

FIG.20 DRIVE UNIT MOUNT

(F7C32520) ﾄﾞﾗｲﾌﾞﾕﾆｯﾄﾏｳﾝﾄ

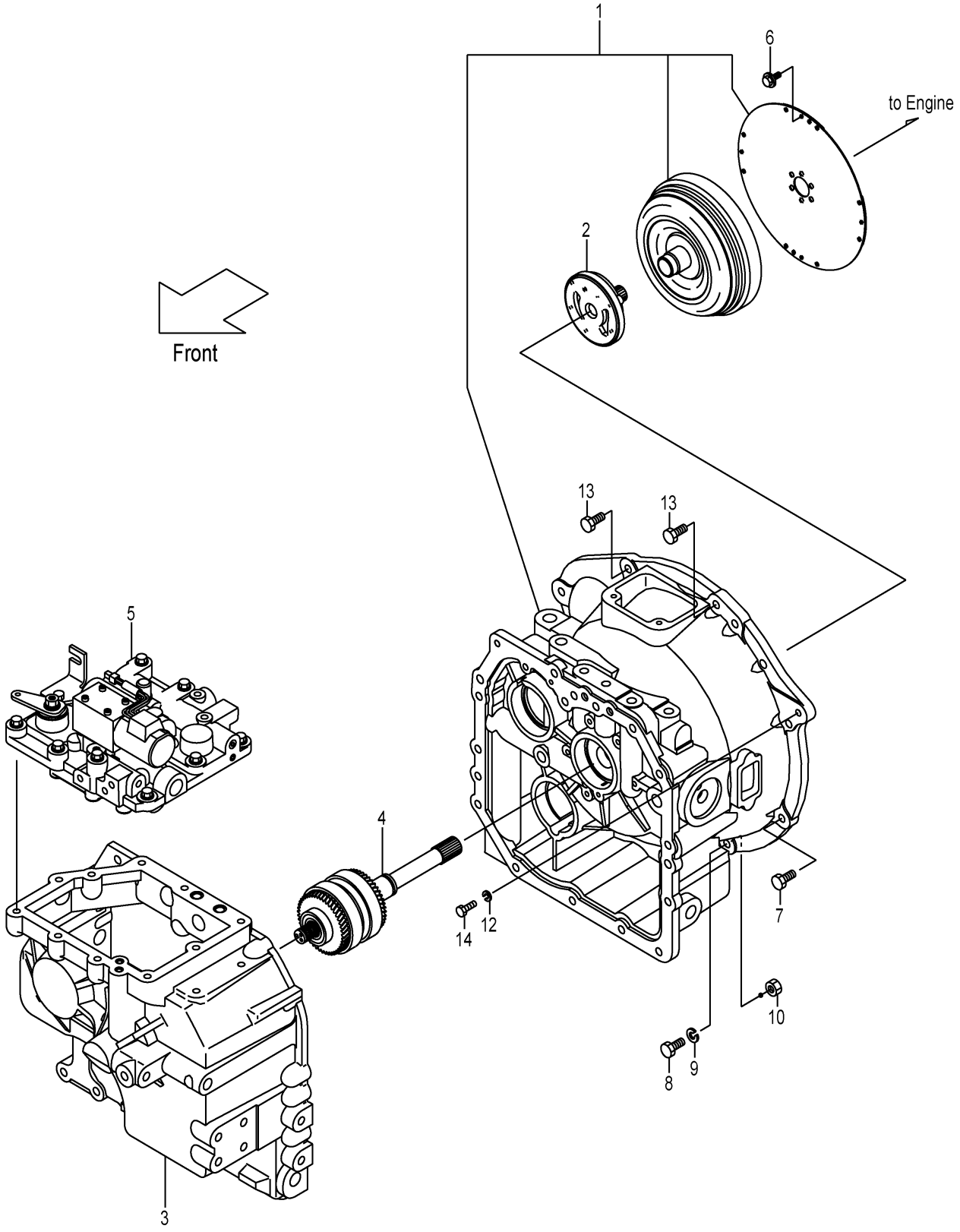

A:FD35T3S

Item No	Part No.	Mark	Description		Req'd	Remarks : Serial No.
A1	12N52-50201		UNIT-ASSY,DRIVE	ﾄﾞﾗｲﾌﾞﾕﾆｯﾄｱｯｾﾝ	1	INC.1-5
1	NO PART NO.		CASE,T/C	ｹｰｽ	1	SEE FIG.21
2	NO PART NO.		PUMP	ﾎﾟﾝﾌﾟ	1	SEE FIG.22
3	NO PART NO.		CASE,T/M	ｹｰｽ	1	SEE FIG.23
4	NO PART NO.		PACK,CLUTCH	ﾊﾟｯｸ	1	SEE FIG.24
5	NO PART NO.		VALVE,CONTROL	ﾊﾞﾙﾌﾞ	1	SEE FIG.25
6	12N53-82621		BOLT,FLANGE	ﾎﾞﾙﾄ	12	
7	01183-10035		BOLT	ﾎﾞﾙﾄ	1	
8	01100-10050		BOLT	ﾎﾞﾙﾄ	4	
9	02010-00010		WASHER	ﾜｯｼｬ	4	
10	01400-00010		NUT	ﾅｯﾄ	4	
11	01103-08040	+	BOLT	ﾎﾞﾙﾄ	1	
12	02010-00008		WASHER	ﾜｯｼｬ	2	
13	01183-10030		BOLT	ﾎﾞﾙﾄ	2	
14	01103-08035		BOLT	ﾎﾞﾙﾄ	1	

FIG.21 TORQUE CONVERTER CASE

(F7C32580) トルクコンバータケース

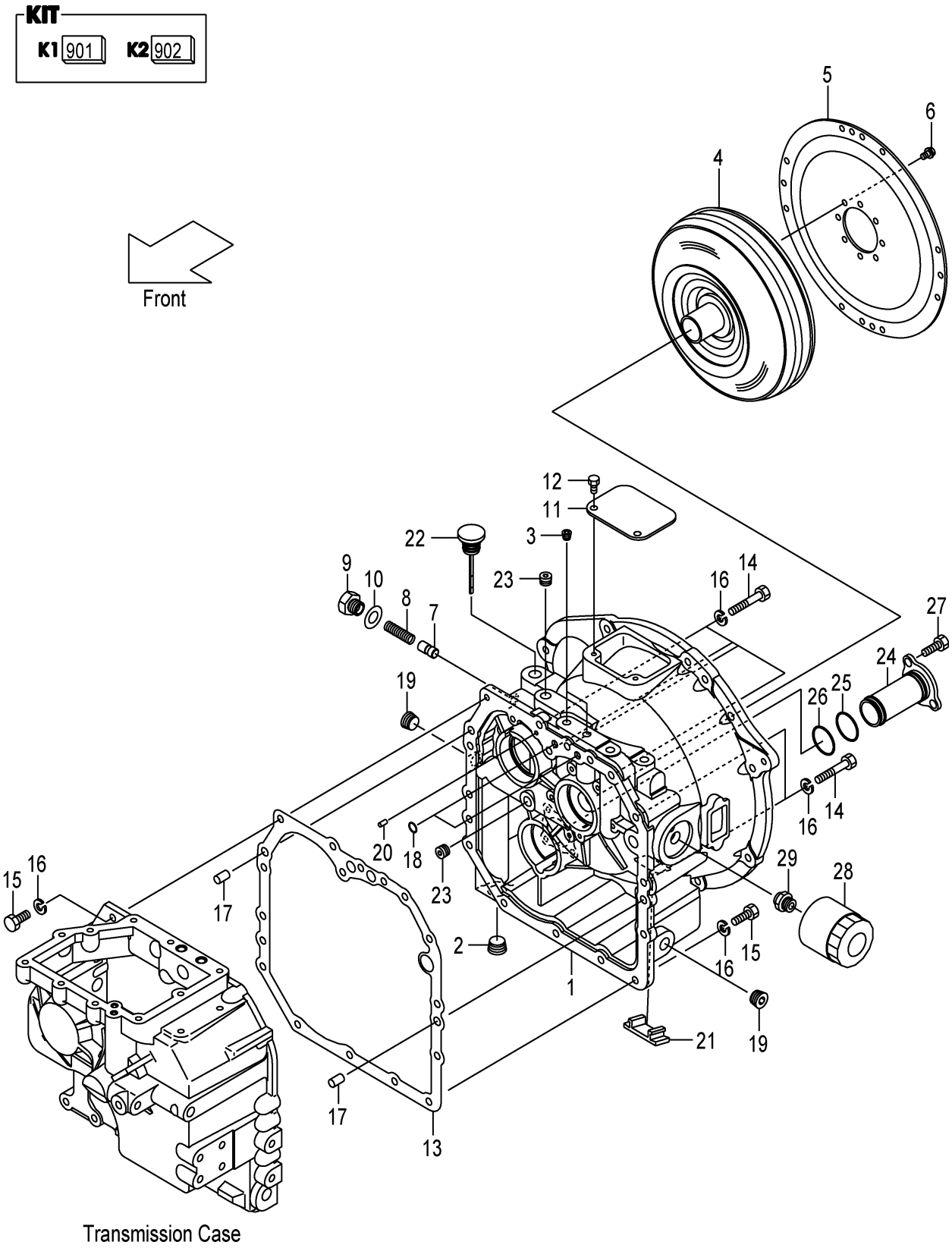

A:FD35T3S

Item No	Part No.	Mark	Description		Req'd	Remarks : Serial No.
901	12N53-89801	K1	KIT,REPAIR,T/M		1	INC.10,13,18,FIG.23:9,11-14
				ﾄﾗﾝｽﾐｯｼｮﾝﾘﾍﾟｱｷｯﾄ		
902	12N53-89811	K2	KIT,SUCTION-STRAINER	ｽﾄﾚｰﾅｷｯﾄ	1	INC.24-26
1	12N53-82001		CASE,TOR-CON	ｹｰｽ	1	
2	27397-52101		PLUG	ﾌﾟﾗｸﾞ	1	
3	116H3-82101		PLUG	ﾌﾟﾗｸﾞ	2	
4	12N53-80301		TORQUE-CONVERTER	ﾄﾙｸｺﾝﾊﾞｰﾀ	1	
5	12N53-80311		PLATE,INPUT	ﾌﾟﾚｰﾄ	1	
6	12N53-82621		BOLT,FLANGE	ﾎﾞﾙﾄ	8	
7	12N53-82012		PISTON	ﾋﾟｽﾄﾝ	1	
8	12163-82331		SPRING	ｽﾌﾟﾘﾝｸﾞ	1	
9	12N53-82021		PLUG	ﾌﾟﾗｸﾞ	1	
10	12163-82421	*	PACKING	ﾊﾟｯｷﾝｸﾞ	1	
11	12N53-82041		COVER,UPPER	ｶﾊﾞｰ	1	
12	01185-08016		BOLT	ﾎﾞﾙﾄ	2	
13	12N53-82081	*	GASKET	ｶﾞｽｹｯﾄ	1	
14	01103-10065		BOLT	ﾎﾞﾙﾄ	6	
15	01103-10030		BOLT	ﾎﾞﾙﾄ	9	
16	02011-00010		WASHER	ﾜｯｼｬ	15	
17	02212-12020		PIN,PARALLEL	ﾋﾟﾝ	2	
18	15583-82521	*	O-RING	Oﾘﾝｸﾞ	2	
19	12163-82541		PLUG	ﾌﾟﾗｸﾞ	2	
20	15943-83261		PIN,PARALLEL	ﾋﾟﾝ	1	
21	12N53-82061		COVER,UNDER	ｶﾊﾞｰ	1	
22	12N53-82711		GAUGE,LEVEL	ｹﾞｰｼﾞ	1	
23	24329-45541		PLUG	ﾌﾟﾗｸﾞ	2	
24	NO PART NO.	#*	STRAINER,SUCTION	ｽﾄﾚｰﾅ	1	
25	115G3-82111	*	O-RING	Oﾘﾝｸﾞ	1	
26	12N53-82761	*	O-RING	Oﾘﾝｸﾞ	1	
27	01100-08020		BOLT	ﾎﾞﾙﾄ	3	
28	115G3-82241		FILTER,OIL	ﾌｲﾙﾀ	1	
29	115G3-82251		NIPPLE	ﾆｯﾌﾟﾙ	1	

FIG.22 CHARGING PUMP

(F7C32590) ﾁｬｰｼﾞﾝｸﾞﾎﾟﾝﾌﾟ

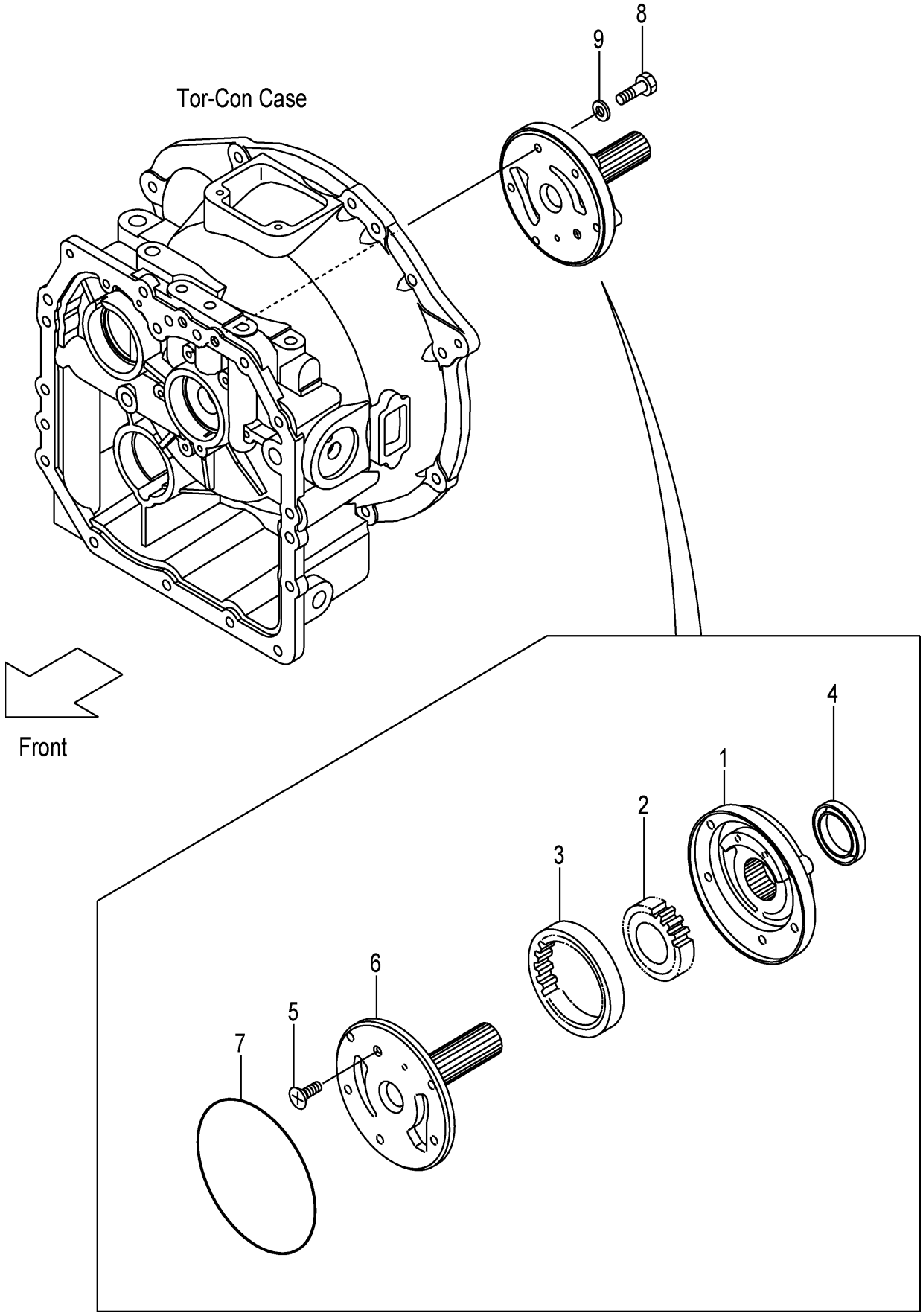

FIG.22

(F7C32590)

A:FD35T3S

Item No	Part No.	Mark	Description		Req'd	Remarks : Serial No.
A1	12N53-80321		PUMP-ASSY,CHARGING		1	INC.1-7
				ﾁｬｰｼﾞﾝｸﾞﾎﾟﾝﾌﾟｱｯｾﾝ		
1	NO PART NO.	#	CASE,PUMP	ｹｰｽ	1	
2	NO PART NO.	#	GEAR,DRIVE	ｷﾞﾔｰ	1	
3	NO PART NO.	#	GEAR,DRIVEN	ｷﾞﾔｰ	1	
4	BK-8104209010		SEAL,OIL	ｼｰﾙ	1	
5	BK-8059061000		SCREW	ｽｸﾘｭ	1	
6	BK-7341006000		SUPPORT,STARTER	ｻﾎﾟｰﾄ	1	
7	BK-81431A4700		O-RING	Oﾘﾝｸﾞ	1	
8	12N53-82641		BOLT,FLANGE	ﾎﾞﾙﾄ	5	
9	12163-82561		PACKING	ﾊﾟｯｷﾝｸﾞ	5	

FIG.23 MISSION CASE

(F7C325A0) ミッションケース

KIT
K1 901

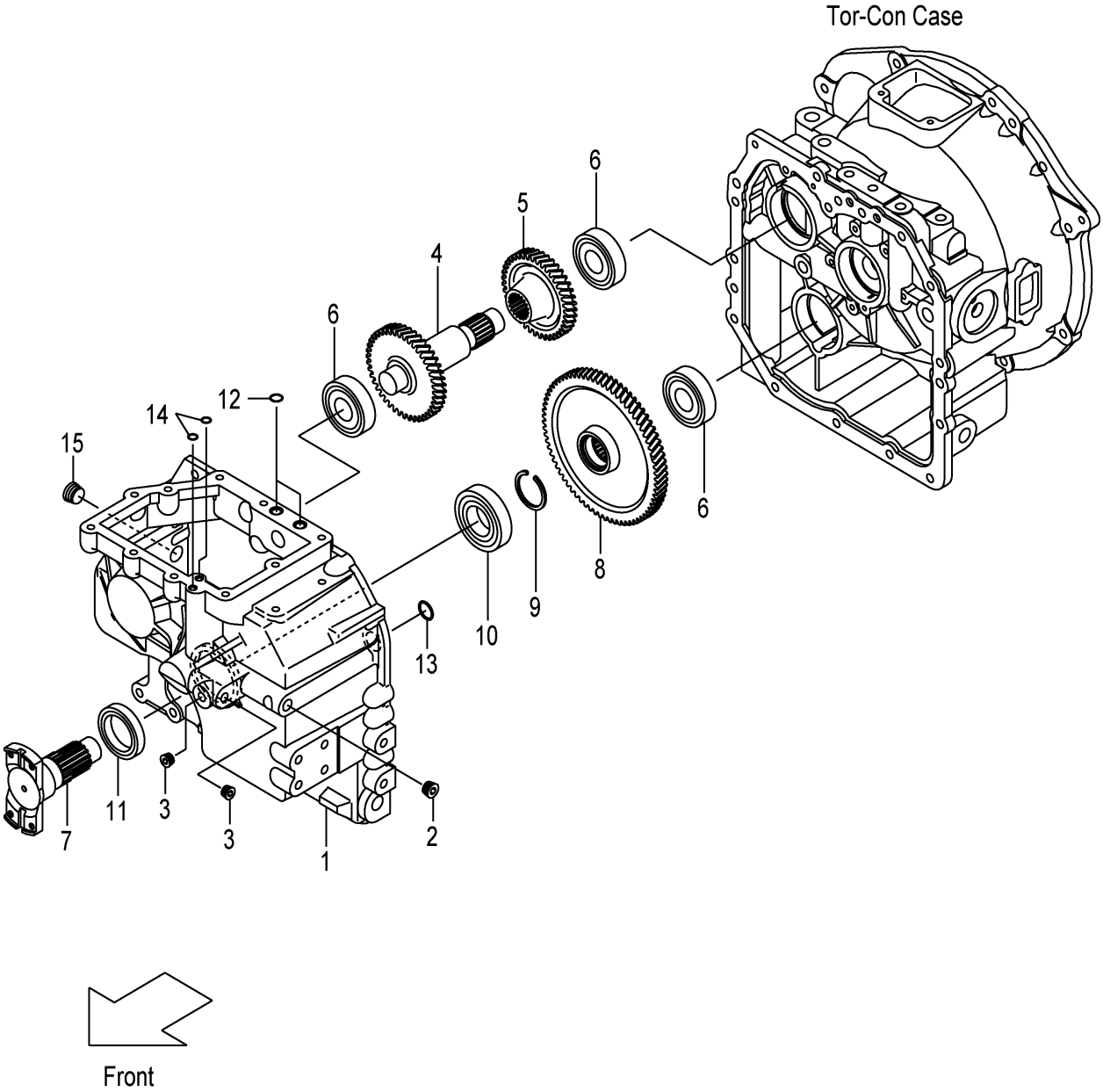

A:FD35T3S

Item No	Part No.	Mark	Description		Req'd	Remarks : Serial No.
901	12N53-89801	K1	KIT,REPAIR,T/M		1	INC.9,11-14,FIG.21:10,13,18
				ﾄﾗﾝｽﾐｯｼｮﾝﾘﾍﾟｱｷｯﾄ		
1	12N53-82091		CASE,T/M	ｹｰｽ	1	
2	24329-45541		PLUG	ﾌﾟﾗｸﾞ	1	
3	116H3-82101		PLUG	ﾌﾟﾗｸﾞ	2	
4	12N53-82151		SHAFT,IDLER	ｼｬﾌﾄ	1	
5	12N53-82161		SHAFT,GEAR	ｼｬﾌﾄ	1	
6	03000-06306		BRG,BALL	ﾍﾞｱﾘﾝｸﾞ	3	
7	12N53-82201		FLANGE,T/M-OUTPUT	ﾌﾗﾝｼﾞ	1	
8	12N53-82171		GEAR,OUTPUT	ｷﾞﾔｰ	1	
9	02120-00040	*	RING,SNAP	ﾘﾝｸﾞ	1	
10	03000-06208		BRG,BALL	ﾍﾞｱﾘﾝｸﾞ	1	
11	12N53-82211	*	SEAL,OIL	ｼｰﾙ	1	
12	15583-82521	*	O-RING	Oﾘﾝｸﾞ	2	
13	15583-82101	*	O-RING	Oﾘﾝｸﾞ	1	
14	15583-82571	*	O-RING	Oﾘﾝｸﾞ	2	
15	12163-82541		PLUG	ﾌﾟﾗｸﾞ	1	

FIG.24 CLUTCH PACK

(F7C325B0) クラッチパック

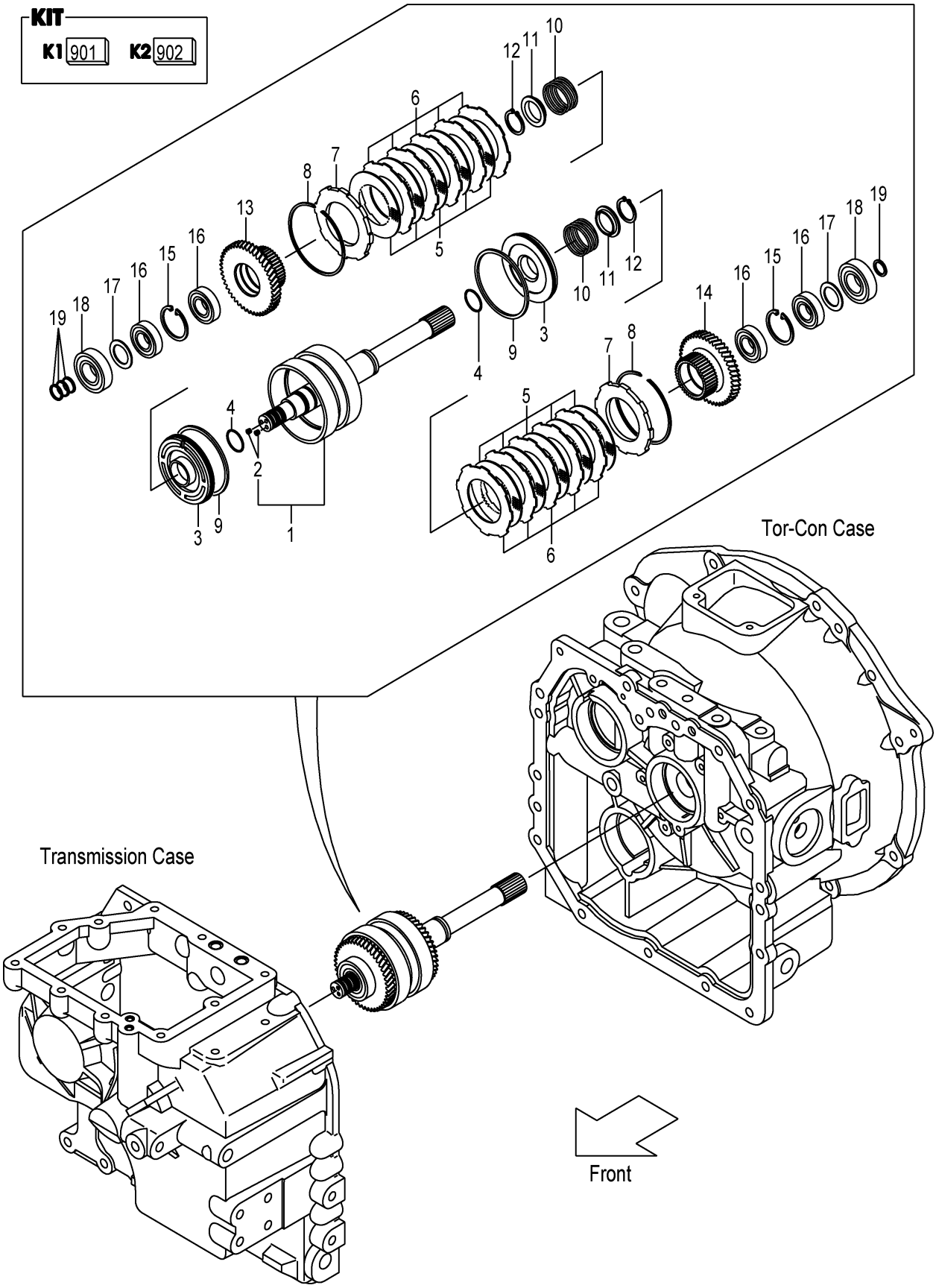

A:FD35T3S

Item No	Part No.	Mark	Description		Req'd	Remarks : Serial No.
A1	12N53-80201		CLUTCH-ASSY,HYDRAU		1	INC.1-19
				ﾊｲﾄﾞﾛﾘｯｸｸﾗｯﾁｱｯｾﾝ		
901	134G3-89811	K1	KIT,REPAIR,CLUTCH	ｸﾗｯﾁﾘﾍﾟｱｷｯﾄ	1	INC.4,8,9,11,12,19
902	134G3-89831	K2	KIT,REPAIR,DISK	ﾃﾞｨｽｸﾘﾍﾟｱｷｯﾄ	1	INC.5,6
1	12N53-82131		SHAFT,INPUT	ｼｬﾌﾄ	1	INC.2
2	01066-08008		PLUG	ﾌﾟﾗｸﾞ	2	
3	134G3-82111		PISTON	ﾋﾟｽﾄﾝ	2	
4	11243-82211	*	O-RING	Oﾘﾝｸﾞ	2	
5	134B3-82401	*	PLATE,FRICTION	ﾌﾟﾚｰﾄ	10	
6	134G3-82121	*	PLATE,MATING	ﾌﾟﾚｰﾄ	10	
7	134G3-82131		END,CLUTCH	ｴﾝﾄﾞ	2	
8	11243-82181	*	RING,SNAP	ﾘﾝｸﾞ	2	
9	134G3-82141	*	RING,SEAL	ﾘﾝｸﾞ	2	
10	11243-82081		SPRING,RETURN,CLUTCH	ｽﾌﾟﾘﾝｸﾞ	2	
11	11243-82091	*	SHEET,SPRING	ｼｰﾄ	2	
12	02100-00040	*	RING,SNAP	ﾘﾝｸﾞ	2	
13	12N53-82101		GEAR,FORWARD	ｷﾞﾔｰ	1	
14	12N53-82111		GEAR,REVERSE	ｷﾞﾔｰ	1	
15	02121-00058		RING,SNAP	ﾘﾝｸﾞ	2	
16	115G3-82351		BRG,BALL	ﾍﾞｱﾘﾝｸﾞ	4	
17	115G3-82361		PLATE,THRUST	ﾌﾟﾚｰﾄ	2	
18	03000-06306		BRG,BALL	ﾍﾞｱﾘﾝｸﾞ	2	
19	11243-82161	*	RING,SEAL	ﾘﾝｸﾞ	4	

FIG.25 CONTROL VALVE

(F7C325C0) コントロールバルブ

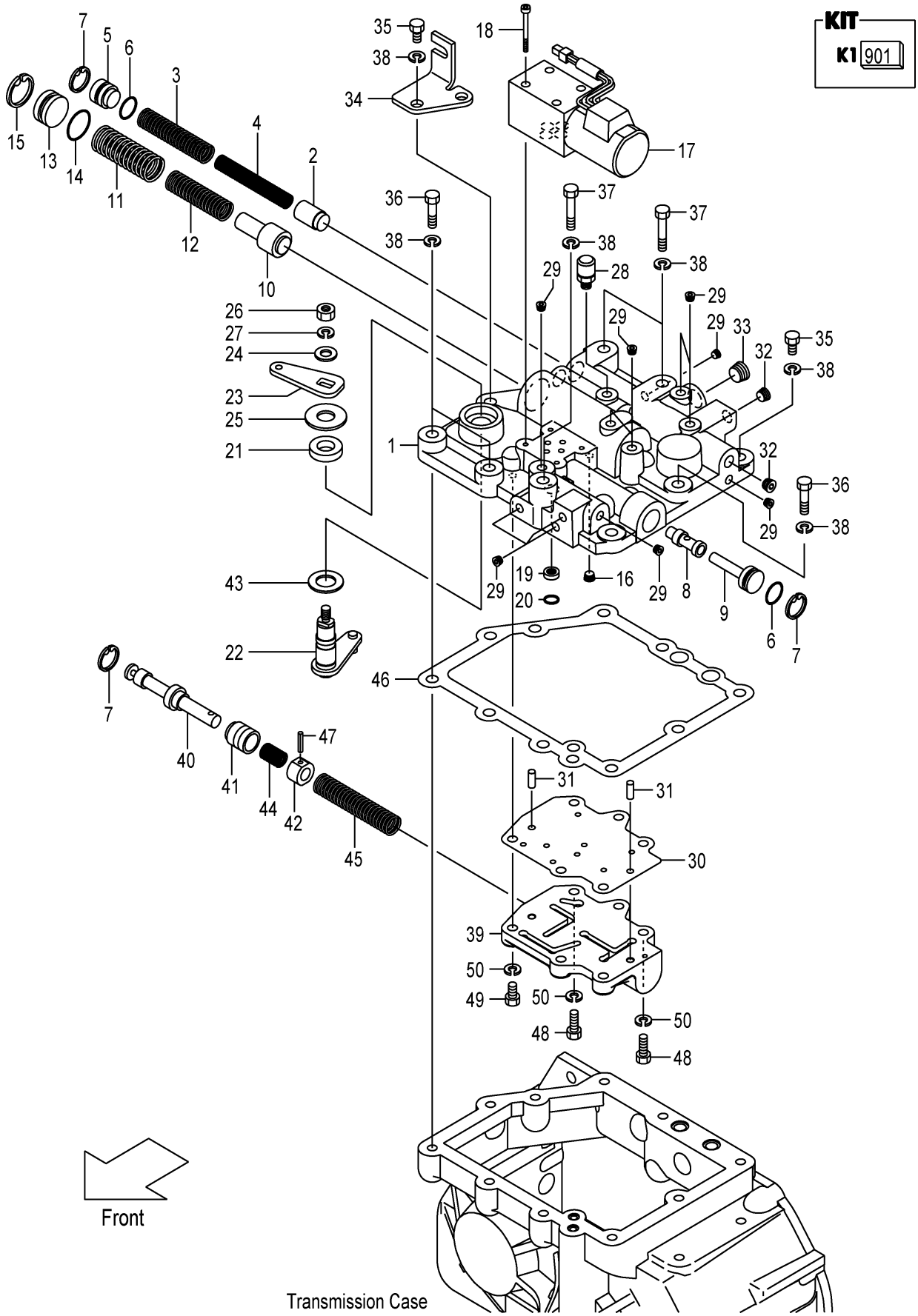

A:FD35T3S

Item No	Part No.	Mark	Description		Req'd	Remarks : Serial No.
A1	12N53-80341		VALVE-ASSY,CONTROL	ｺﾝﾄﾛｰﾙﾊﾞﾙﾌﾞｱｯｾﾝ	1	INC.1-51
901	12N53-89831	K1	KIT,REPAIR,VALVE	ﾊﾞﾙﾌﾞﾘﾍﾟｱｷｯﾄ	1	INC.6,7,14,15,21,25,30,43,46
1	12N53-82223		COVER,CASE	ｶﾊﾞｰ	1	
2	12N53-82291		PISTON,MAIN-RELIEF	ﾋﾟｽﾄﾝ	1	
3	15583-82411		SPRING	ｽﾌﾟﾘﾝｸﾞ	1	
4	15583-82421		SPRING	ｽﾌﾟﾘﾝｸﾞ	1	
5	12N53-82371		PLUG,MAIN-RELIEF	ﾌﾟﾗｸﾞ	1	
6	118H3-82231	*	O-RING	Oﾘﾝｸﾞ	2	
7	02110-00022	*	RING,SNAP	ﾘﾝｸﾞ	3	
8	139B3-82121		SPOOL	ｽﾌﾟｰﾙ	1	
9	12N53-82351		PLUG,FR-PISTON	ﾌﾟﾗｸﾞ	1	
10	15583-82441		SPOOL,ACC	ｽﾌﾟｰﾙ	1	
11	15583-82451		SPRING	ｽﾌﾟﾘﾝｸﾞ	1	
12	15583-82461		SPRING	ｽﾌﾟﾘﾝｸﾞ	1	
13	12N53-82361		PLUG,ACC	ﾌﾟﾗｸﾞ	1	
14	12N53-82581	*	O-RING	Oﾘﾝｸﾞ	1	
15	02110-00030	*	RING,SNAP	ﾘﾝｸﾞ	1	
16	115G3-82671		PLUG,CHOKE	ﾌﾟﾗｸﾞ	1	
17	12N53-82551		VALVE,SOLENOID	ﾊﾞﾙﾌﾞ	1	
18	01170-05045		BOLT	ﾎﾞﾙﾄ	4	
19	12N53-82531		FILTER,COIN	ﾌｲﾙﾀ	1	
20	12N53-82571		O-RING	Oﾘﾝｸﾞ	1	
21	12N53-82251	*	SEAL,OIL	ｼｰﾙ	1	
22	12N53-82421		LINK,INCHING	ﾘﾝｸ	1	
23	12N53-82451		PLATE,INCHING	ﾌﾟﾚｰﾄ	1	
24	23656-42601		WASHER	ﾜｯｼｬ	1	
25	12N53-82781	*	WASHER	ﾜｯｼｬ	1	
26	01400-00008		NUT	ﾅｯﾄ	1	
27	02011-00008		WASHER	ﾜｯｼｬ	1	
28	15573-42151		BREATHER,AIR	ﾌﾞﾘｰｻﾞ	1	
29	116H3-82201		PLUG	ﾌﾟﾗｸﾞ	11	
30	12N53-82721	*	PLATE,SEPARATE	ﾌﾟﾚｰﾄ	1	
31	02212-06016		PIN,PARALLEL	ﾋﾟﾝ	2	
32	116H3-82101		PLUG	ﾌﾟﾗｸﾞ	2	
33	24329-45541		PLUG	ﾌﾟﾗｸﾞ	1	
34	12N53-82741		BRACKET,LINK	ﾌﾞﾗｹｯﾄ	1	
35	01103-10030		BOLT	ﾎﾞﾙﾄ	4	
36	01103-10040		BOLT	ﾎﾞﾙﾄ	3	
37	01103-10060		BOLT	ﾎﾞﾙﾄ	3	
38	02011-00010		WASHER	ﾜｯｼｬ	10	
39	12N53-82232		BODY,VALVE	ﾎﾞﾃﾞｨ	1	
40	12N53-82732		SPOOL,INCHING	ｽﾌﾟｰﾙ	1	
41	12N53-82321		PLUNGER	ﾌﾟﾗﾝｼﾞｬ	1	
42	12N53-82331		PISTON	ﾋﾟｽﾄﾝ	1	
43	12N53-82771	*	WASHER	ﾜｯｼｬ	1	
44	12N53-82501		SPRING	ｽﾌﾟﾘﾝｸﾞ	1	
45	12N53-82481		SPRING	ｽﾌﾟﾘﾝｸﾞ	1	
46	12N53-82701	*	GASKET,CASE-COVER	ｶﾞｽｹｯﾄ	1	
47	02270-04020		PIN,SPRING	ﾋﾟﾝ	1	
48	01103-08040		BOLT	ﾎﾞﾙﾄ	2	

FIG.25 CONTROL VALVE

(F7C325C0) コントロールバルブ

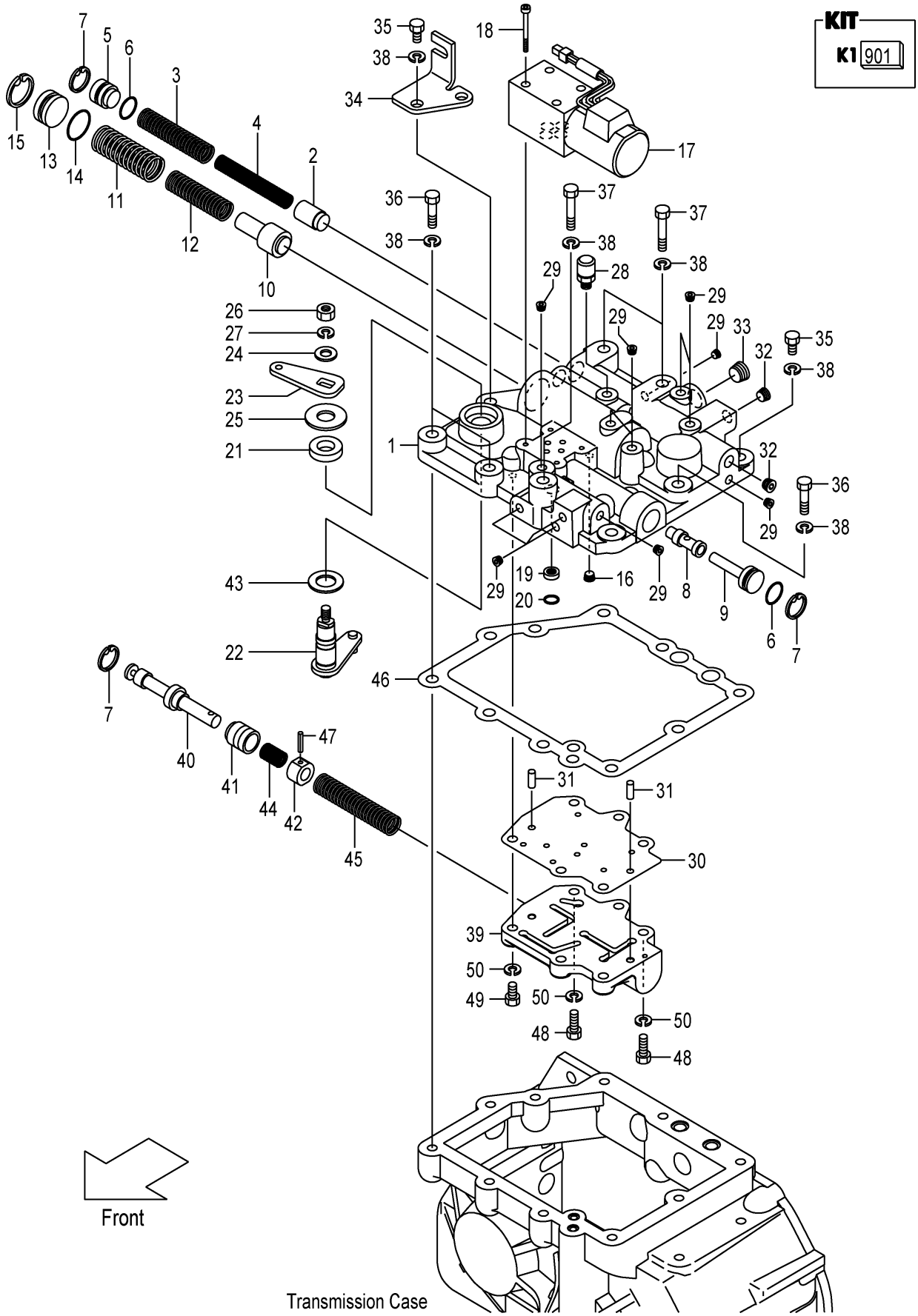

A:FD35T3S

Item No	Part No.	Mark	Description	Req'd	Remarks : Serial No.
49	01103-08030		BOLT ﾎﾞﾙﾄ	4	
50	02011-00008		WASHER ﾜｯｼｬ	6	

FIG.26 DRIVE AXLE

(F7C33010) ﾄﾞﾗｲﾌﾞｱｸｽﾙ

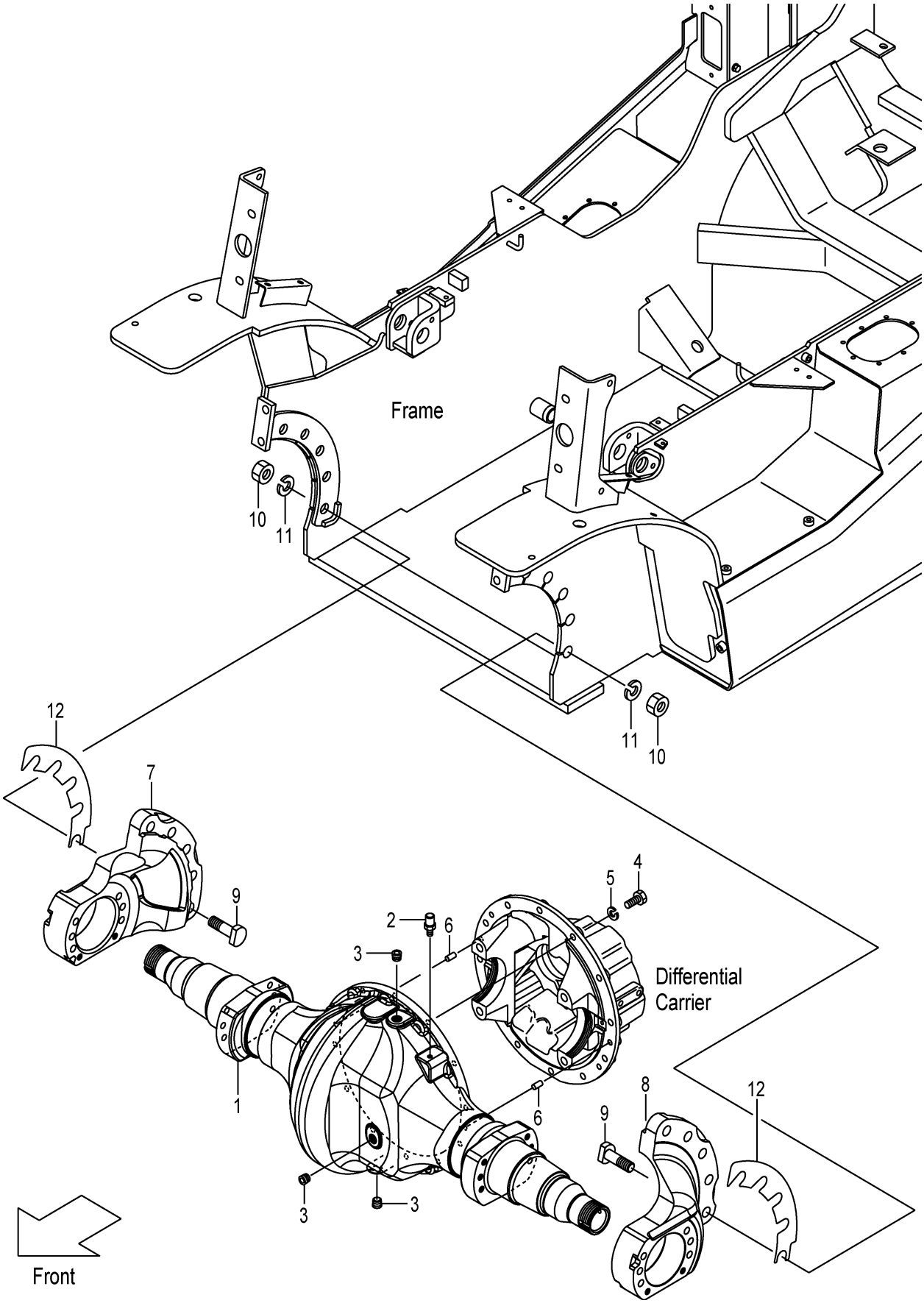

FIG.26

(F7C33010)

A:FD35T3S

Item No	Part No.	Mark	Description		Req'd	Remarks : Serial No.
1	22Y53-00301		HOUSING,AXLE	ﾊｳｼﾞﾝｸﾞ	1	
2	15573-42151		BREATHER,AIR	ﾌﾞﾘｰｻﾞ	1	
3	22193-03001		PLUG	ﾌﾟﾗｸﾞ	3	
4	01106-12035		BOLT	ﾎﾞﾙﾄ	12	
5	02011-00012		WASHER	ﾜｯｼｬ	12	
6	02212-10020		PIN,PARALLEL	ﾋﾟﾝ	2	
7	22Y53-00601		SUPPORT,AXLE,RH	ｻﾎﾟｰﾄ	1	
8	22Y53-00611		SUPPORT,AXLE,LH	ｻﾎﾟｰﾄ	1	
9	22Y53-02151		BOLT	ﾎﾞﾙﾄ	10	
10	01400-10020		NUT	ﾅｯﾄ	10	
11	02010-00020		WASHER	ﾜｯｼｬ	10	
12	22N53-02611		SHIM,SUPPORT,T-1.0	ｼﾑ	2	

FIG.27 DRUM HUB

(F7C33020) ﾄﾞﾗﾑﾊﾌﾞ

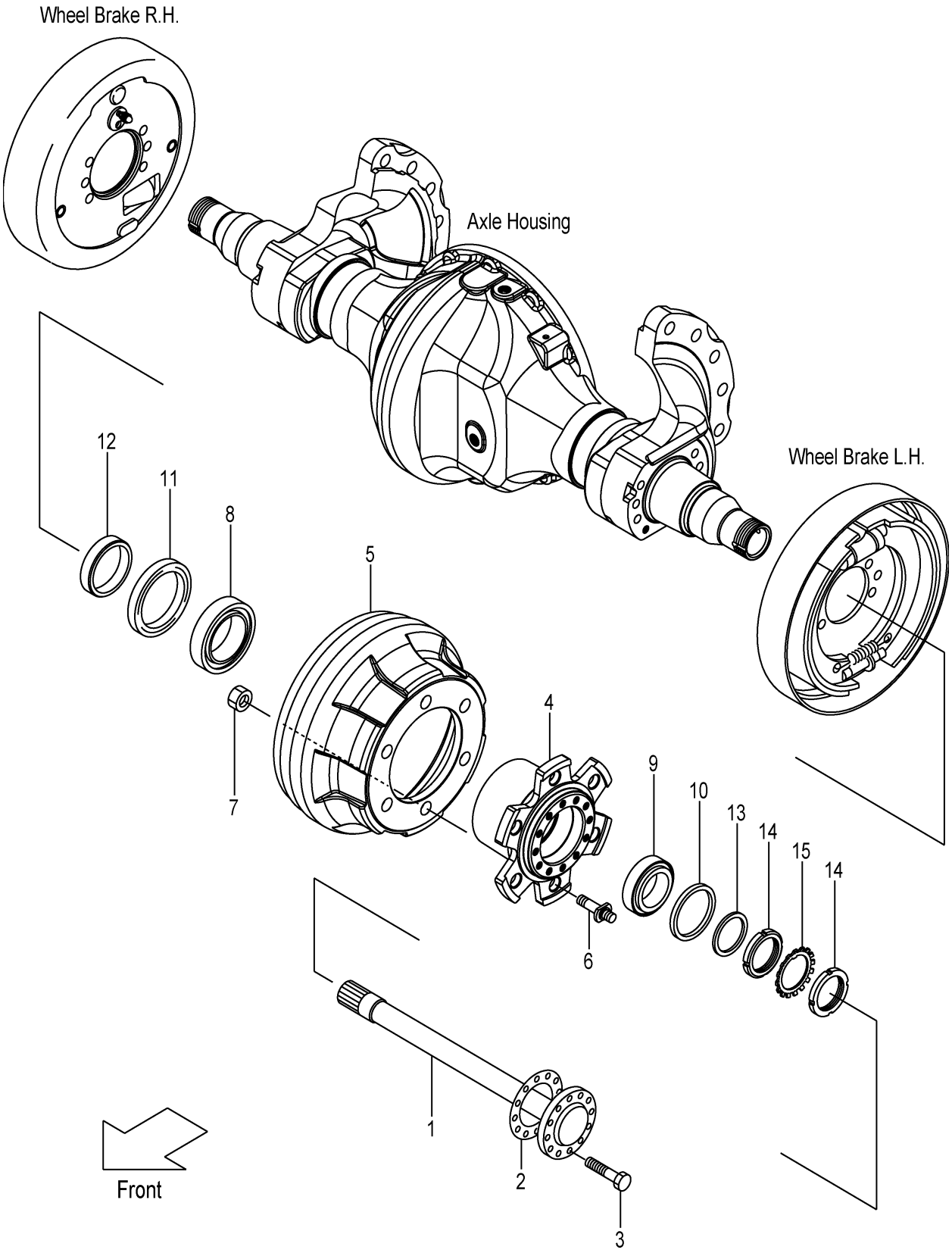

FIG.27

(F7C33020)

A:FD35T3S

Item No	Part No.	Mark	Description		Req'd	Remarks : Serial No.
1	22Y53-02201		SHAFT,DRIVE	ｼｬﾌﾄ	2	
2	24453-02102		PACKING	ﾊﾟｯｷﾝｸﾞ	2	
3	24453-02061		BOLT,REAMER	ﾎﾞﾙﾄ	24	
4	22Y53-02021		HUB,FRONT	ﾊﾌﾞ	2	
5	24453-02131		DRUM,BRAKE	ﾄﾞﾗﾑ	2	
6	25303-02102		BOLT,HUB	ﾎﾞﾙﾄ	12	
7	01400-10020		NUT	ﾅｯﾄ	12	
8	22Y53-00401		BRG,TAPER-ROLLER	ﾍﾞｱﾘﾝｸﾞ	2	
9	23453-02071		BRG,TAPER-ROLLER	ﾍﾞｱﾘﾝｸﾞ	2	INC.10
10	23453-02131		SEAL,OIL	ｼｰﾙ	2	
11	23653-02001		SEAL,OIL	ｼｰﾙ	2	
12	22Y53-02071		RETAINER,OIL-SEAL	ﾘﾃｰﾅ	2	
13	23453-02091		WASHER	ﾜｯｼｬ	2	
14	03192-00012		NUT,BRG	ﾅｯﾄ	4	
15	03192-10012		WASHER,BRG	ﾜｯｼｬ	2	

FIG.28 PROPELLER SHAFT

(F7C33310) ﾌﾟﾛﾍﾟﾗｼｬﾌﾄ

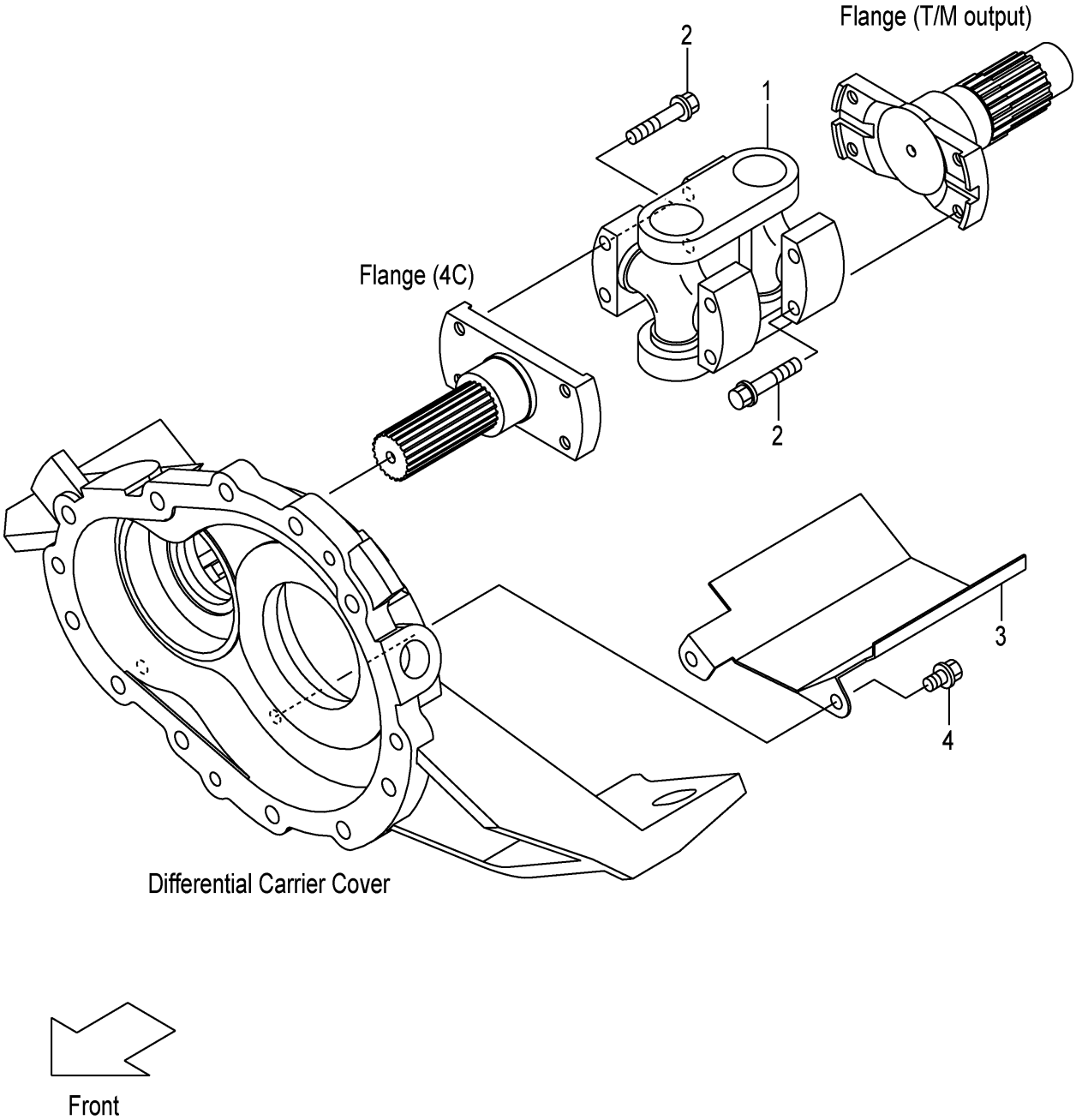

FIG.28

(F7C33310)

A:FD35T3S

Item No	Part No.	Mark	Description	Req'd	Remarks : Serial No.
1	12N53-32001		SHAFT,PROPELLER ｼｬﾌﾄ	1	
2	12N53-82641		BOLT,FLANGE ﾎﾞﾙﾄ	8	
3	12N53-32011		COVER,PROPEL-SHAFT ｶﾊﾞｰ	1	
4	12N53-82621		BOLT,FLANGE ﾎﾞﾙﾄ	2	

FIG.29 REDUCTION & DIFFERENTIAL

(F7C33510) ﾘﾀﾞｸｼｮﾝ&ﾃﾞﾌｧﾚﾝｼｬﾙ

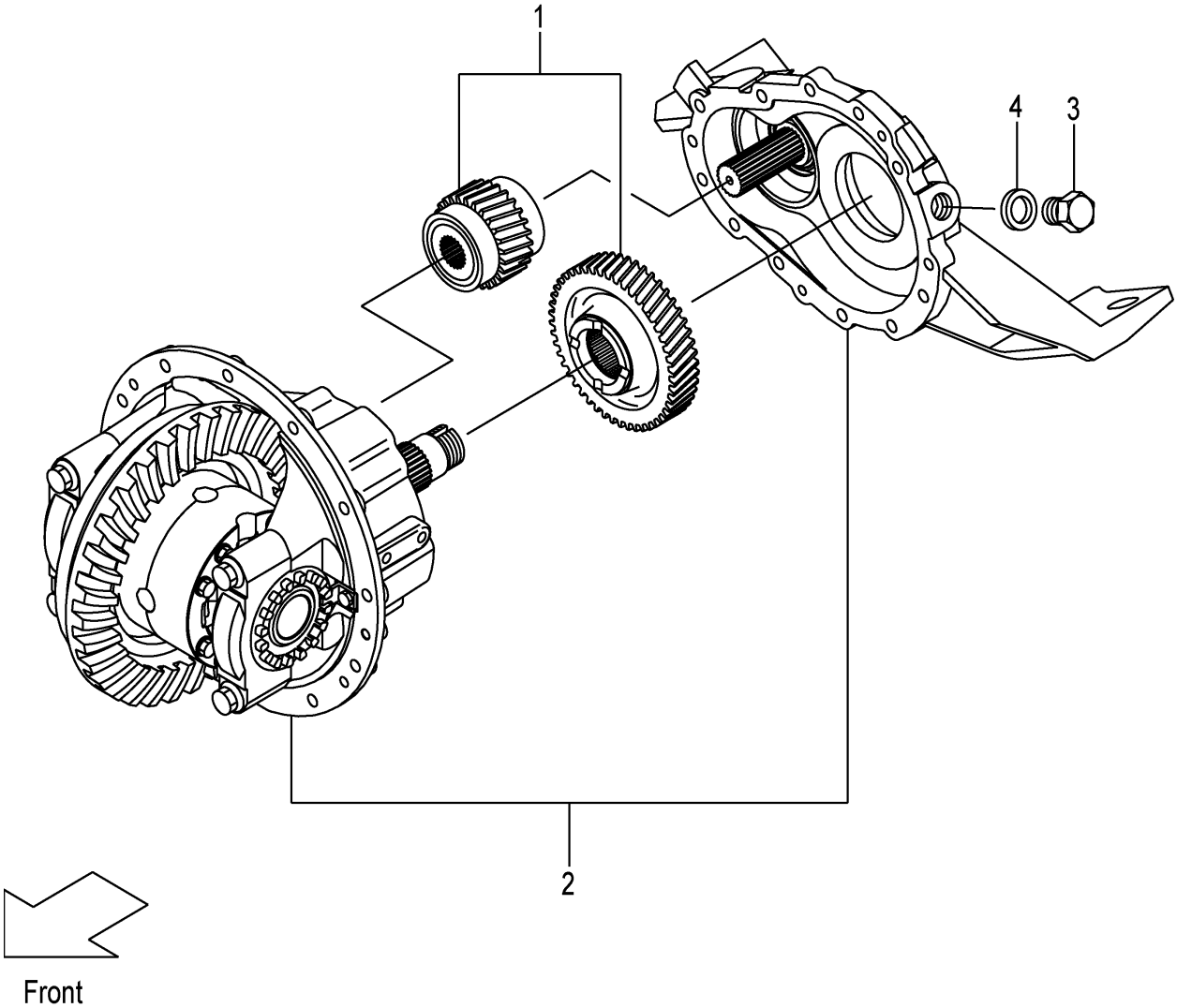

FIG.29

(F7C33510)

A:FD35T3S

Item No	Part No.	Mark	Description		Req'd	Remarks : Serial No.
A1	12N53-50201		DIFFERENTIAL-ASSY	ﾃﾞﾌｧﾚﾝｼｬﾙｱｯｾﾝ	1	INC.1,2
1	NO PART NO.		REDUCTION	ﾘﾀﾞｸｼｮﾝ	1	SEE FIG.30
2	NO PART NO.		DIFFERENTIAL	ﾃﾞﾌｧﾚﾝｼｬﾙ	1	SEE FIG.31
3	124T3-42651		BOLT	ﾎﾞﾙﾄ	1	
4	124T3-42661		PACKING	ﾊﾟｯｷﾝｸﾞ	1	

FIG.30 REDUCTION

(F7C33520) ﾘﾀﾞｸｼｮﾝ

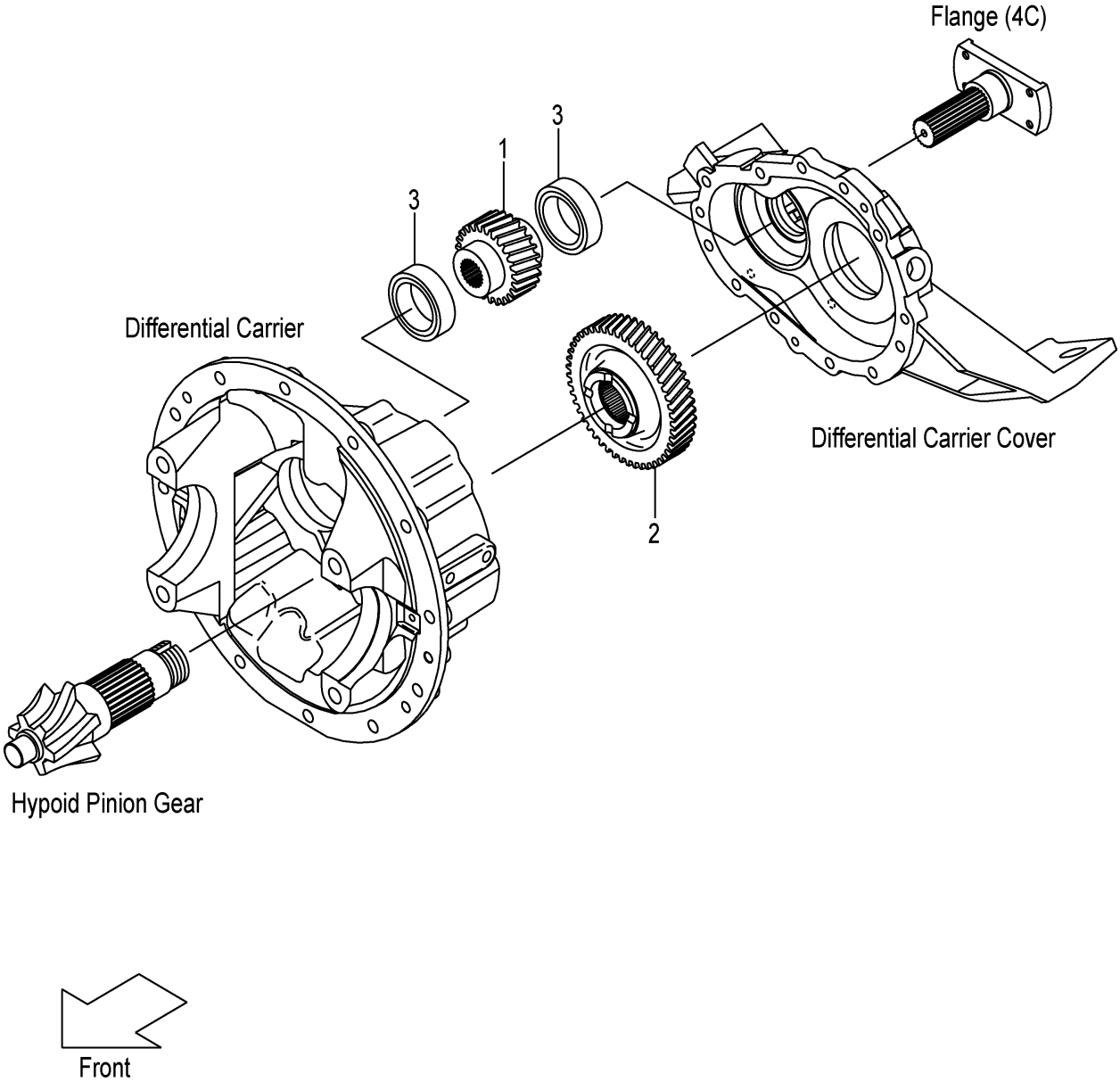

FIG.30

(F7C33520)

A:FD35T3S

Item No	Part No.	Mark	Description	Req'd	Remarks : Serial No.
1	12N53-22001		GEAR,REDUCTION ｷﾞﾔｰ	1	
2	12N53-22011		GEAR,REDUCTION ｷﾞﾔｰ	1	
3	03000-06210		BRG,BALL ﾍﾞｱﾘﾝｸﾞ	2	

FIG.31 DIFFERENTIAL

(F7C33530) デ゛ファレンシャル

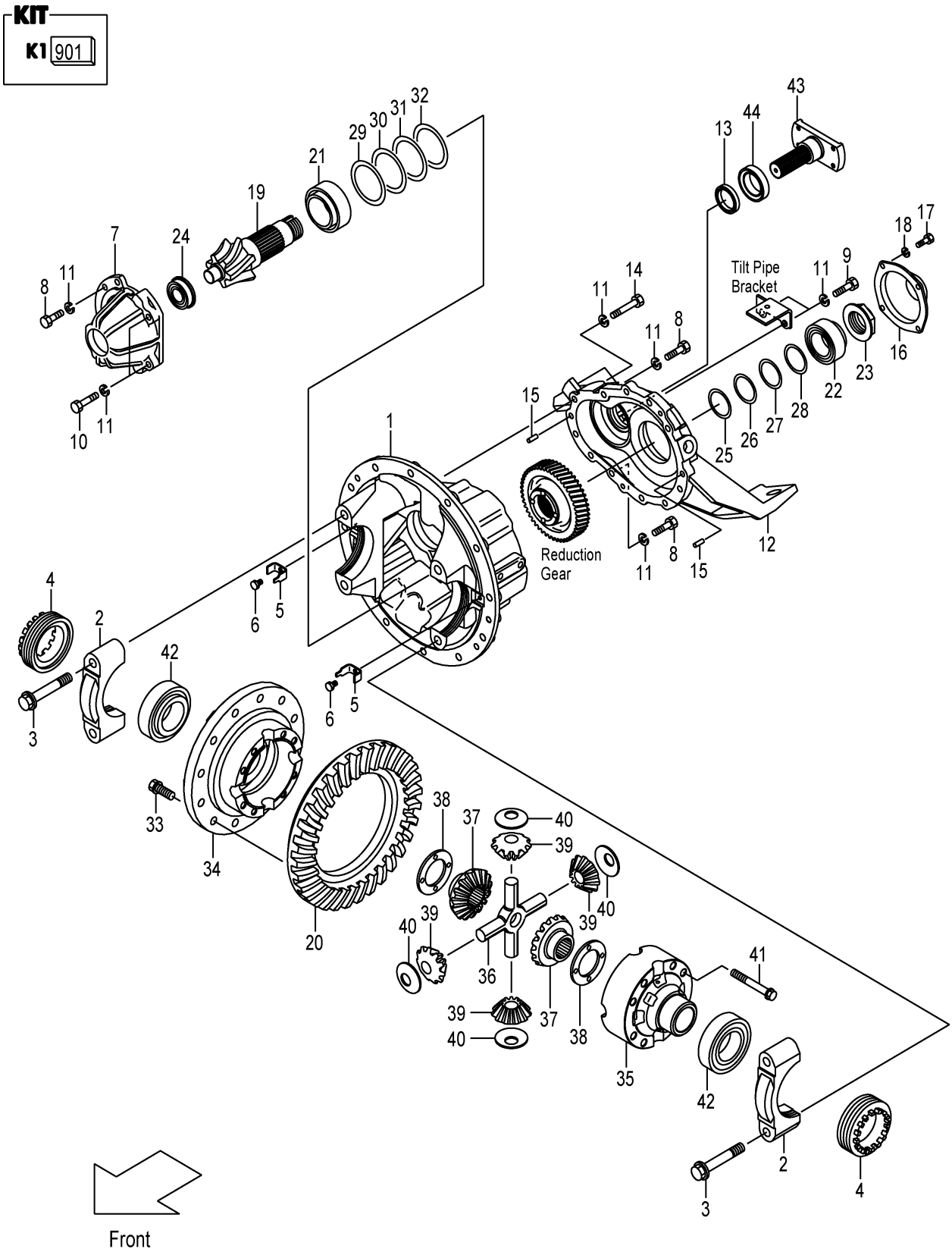

A:FD35T3S

Item No	Part No.	Mark	Description		Req'd	Remarks : Serial No.
901	12N53-59822	K1	KIT,OVERHAUL,DIFF	ｵｰﾊﾞﾎｰﾙｷｯﾄ	1	INC.5,13,23,25-32,38,40
A1	12N53-50301		CARRIER & CAP-ASSY	ｷｬﾘｱ&ｷｬｯﾌﾟｱｯｾﾝ	1	INC.1-3
1	NO PART NO.	#	CARRIER,DIFFERENTIAL	ｷｬﾘｱ	1	
2	NO PART NO.	#	CAP,BRG	ｷｬｯﾌﾟ	2	
3	12N53-52131		BOLT,REAMER	ﾎﾞﾙﾄ	4	
4	10A73-52231		NUT,ADJUST	ﾅｯﾄ	2	
5	12N53-52142	*	PLATE,LOCK	ﾌﾟﾚｰﾄ	2	
6	01185-08016		BOLT	ﾎﾞﾙﾄ	2	
7	12N53-52061		SUPPORT,BRG	ｻﾎﾟｰﾄ	1	
8	01106-10030		BOLT	ﾎﾞﾙﾄ	6	
9	01106-10035		BOLT	ﾎﾞﾙﾄ	2	
10	01106-10045		BOLT	ﾎﾞﾙﾄ	2	
11	02011-00010		WASHER	ﾜｯｼｬ	17	
12	12N53-52031		COVER,DIFF-CARRIER	ｶﾊﾞｰ	1	
13	12N53-52251	*	SEAL,OIL	ｼｰﾙ	1	
14	01106-10060		BOLT	ﾎﾞﾙﾄ	7	
15	02212-10020		PIN,PARALLEL	ﾋﾟﾝ	2	
16	12N53-52111		COVER,PINION	ｶﾊﾞｰ	1	
17	01103-08016		BOLT	ﾎﾞﾙﾄ	4	
18	02011-00008		WASHER	ﾜｯｼｬ	4	
A2	12N53-59801		GEAR-ASSY,HYPOID	ﾊｲﾎﾟｲﾄﾞｷﾞｬｰｱｯｾﾝ	1	INC.19,20
19	NO PART NO.	#	GEAR,PINION,LH	ｷﾞﾔｰ	1	
20	NO PART NO.	#	GEAR,RING,RH	ｷﾞﾔｰ	1	
21	14603-52131		BRG,TAPER-ROLLER	ﾍﾞｱﾘﾝｸﾞ	1	
22	12N53-52231		BRG,TAPER-ROLLER	ﾍﾞｱﾘﾝｸﾞ	1	
23	12N53-52101	*	NUT,PINION	ﾅｯﾄ	1	
24	12N53-52341		BRG,ROLLER	ﾍﾞｱﾘﾝｸﾞ	1	
25	12N53-52171	*	SHIM,T-0.1	ｼﾑ	1	
26	12N53-52271	*	SHIM,T-0.15	ｼﾑ	1	
27	12N53-52181	*	SHIM,T-0.2	ｼﾑ	2	
28	12N53-52191	*	SHIM,T-0.5	ｼﾑ	1	
29	12N53-52201	*	SHIM,T-0.1	ｼﾑ	1	
30	12N53-52291	*	SHIM,T-0.15	ｼﾑ	1	
31	12N53-52211	*	SHIM,T-0.2	ｼﾑ	2	
32	12N53-52221	*	SHIM,T-0.5	ｼﾑ	1	
33	12N53-52151		BOLT,FLANGE	ﾎﾞﾙﾄ	12	
A3	12N53-59811		CASE-ASSY,CROSS	ｸﾛｽｹｰｽｱｯｾﾝ	1	INC.34,35
34	NO PART NO.	#	CASE,CROSS,RH	ｹｰｽ	1	
35	NO PART NO.	#	CASE,CROSS,LH	ｹｰｽ	1	
36	124G3-52011		SPIDER	ｽﾊﾟｲﾀﾞ	1	
37	134A3-52041		GEAR,SIDE	ｷﾞﾔｰ	2	
38	16113-52141	*	WASHER,THRUST	ﾜｯｼｬ	2	
39	134A3-52051		GEAR,PINION	ｷﾞﾔｰ	4	
40	16113-52121	*	WASHER,THRUST	ﾜｯｼｬ	4	
41	12N53-52161		BOLT,FLANGE	ﾎﾞﾙﾄ	8	
42	12N53-52241		BRG,TAPER-ROLLER	ﾍﾞｱﾘﾝｸﾞ	2	
43	12N53-52091		FLANGE,4C	ﾌﾗﾝｼﾞ	1	
44	12N53-52121		COVER,DUST	ｶﾊﾞｰ	1	

FIG.32 WHEEL BRAKE

(F7C33710) ホイールブレーキ

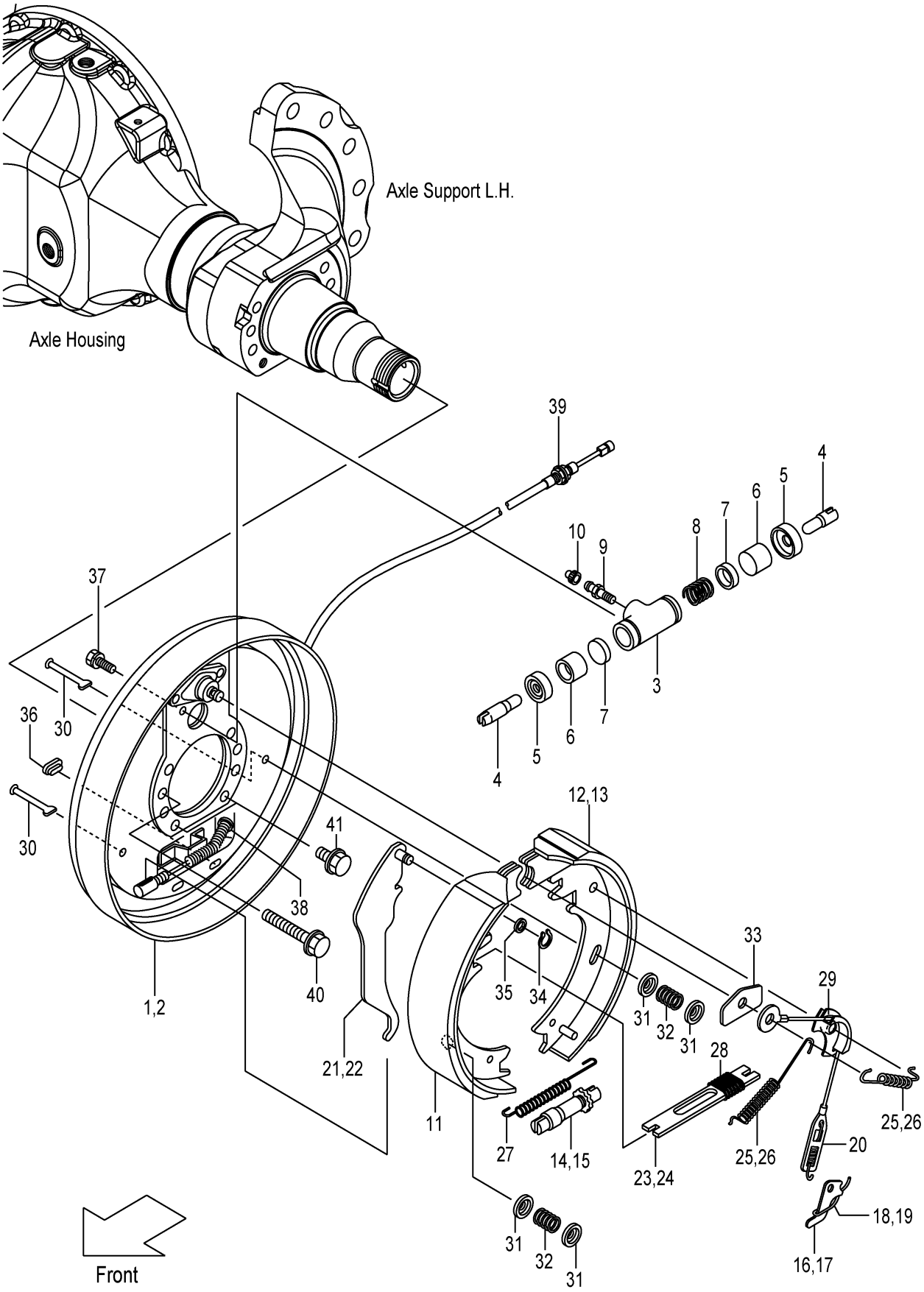

A:FD35T3S

Item No	Part No.	Mark	Description		Req'd	Remarks : Serial No.
A1	22Y53-70101		BRAKE-ASSY,RH	ﾌﾞﾚｰｷｱｯｾﾝ	1	INC.1,3-12,14,16,18,20,21, 23,25,27-39
A2	22Y53-70201		BRAKE-ASSY,LH	ﾌﾞﾚｰｷｱｯｾﾝ	1	INC.2-11,13,15,17,19,20,22, 24,26-39
1	C-52-11255-21001		PLATE,BACK,RH	ﾌﾟﾚｰﾄ	1	
2	C-52-11255-11001		PLATE,BACK,LH	ﾌﾟﾚｰﾄ	1	
A3	C-52-11239-52002-P		CYL-ASSY,WHEEL	ﾎｲｰﾙｼﾘﾝﾀﾞｱｯｾﾝ	2	INC.3-10
3	NO PART NO.	#	BODY,WHEEL-CYL	ﾎﾞﾃﾞｨ	2	
4	NO PART NO.		LINK,CONNECTING	ﾘﾝｸ	4	
5	NO PART NO.	#	BOOT	ﾌﾞｰﾂ	4	
6	NO PART NO.	#	PISTON	ﾋﾟｽﾄﾝ	4	
7	NO PART NO.	#	CUP,WHEEL-CYL	ｶｯﾌﾟ	4	
8	NO PART NO.	#	SPRING,WHEEL-CYL	ｽﾌﾟﾘﾝｸﾞ	2	
9	NO PART NO.		SCREW,BLEEDER	ｽｸﾘｭ	2	
10	NO PART NO.		CAP,BLEEDER-SCREW	ｷｬｯﾌﾟ	2	
11	C-52-11246-73005		SHOE & LINING	ｼｭｰ & ﾗｲﾆﾝｸﾞ	2	
12	C-52-11246-83025		SHOE & LINING,RH	ｼｭｰ & ﾗｲﾆﾝｸﾞ	1	
13	C-52-11246-83015		SHOE & LINING,LH	ｼｭｰ & ﾗｲﾆﾝｸﾞ	1	
14	C-52-11242-23300		ADJUSTER,RH	ｱｼﾞｬｽﾀ	1	
15	C-52-11242-13300		ADJUSTER,LH	ｱｼﾞｬｽﾀ	1	
16	C-52-11218-25151		LEVER,RH	ﾚﾊﾞｰ	1	
17	C-52-11218-15151		LEVER,LH	ﾚﾊﾞｰ	1	
18	C-52-11218-25161		SPRING,RH	ｽﾌﾟﾘﾝｸﾞ	1	
19	C-52-11218-15161		SPRING,LH	ｽﾌﾟﾘﾝｸﾞ	1	
20	C-52-11255-55090		SPRING & CABLE	ｽﾌﾟﾘﾝｸﾞ & ｹｰﾌﾞﾙ	2	
21	C-52-11242-24500		LEVER,PARKING,RH	ﾚﾊﾞｰ	1	
22	C-52-11242-14500		LEVER,PARKING,LH	ﾚﾊﾞｰ	1	
23	C-52-11242-24530		STRUT,RH	ｽﾄﾗｯﾄ	1	
24	C-52-11242-14530		STRUT,LH	ｽﾄﾗｯﾄ	1	
25	C-52-11242-54011		SPRING,RH	ｽﾌﾟﾘﾝｸﾞ	2	
26	C-52-11242-54010		SPRING,LH	ｽﾌﾟﾘﾝｸﾞ	2	
27	C-52-11246-54071		SPRING	ｽﾌﾟﾘﾝｸﾞ	2	
28	C-52-11232-54540		SPRING	ｽﾌﾟﾘﾝｸﾞ	2	
29	C-52-11003-05143		GUIDE,CABLE	ｶﾞｲﾄﾞ	2	
30	C-52-51308-54160		PIN,SHOE-HOLD	ﾋﾟﾝ	4	
31	C-52-51302-53840		CUP,SHOE-HOLD	ｶｯﾌﾟ	8	
32	C-52-11105-54110		SPRING,SHOE-HOLD	ｽﾌﾟﾘﾝｸﾞ	4	
33	C-52-11239-51270		PLATE,SHOE-GUIDE	ﾌﾟﾚｰﾄ	2	
34	C-52-10901-64560		RETAINER	ﾘﾃｰﾅ	2	
35	C-52-10901-64550		WASHER,WAVE	ﾜｯｼｬ	2	
36	C-52-11204-69010		COVER	ｶﾊﾞｰ	2	
37	C-52-11252-52350		BOLT	ﾎﾞﾙﾄ	4	
38	C-90-9200-0800		E-RING	Eﾘﾝｸﾞ	2	
39	C-52-11246-14607-R		CABLE,PARKING	ｹｰﾌﾞﾙ	2	
40	22Y53-72031		BOLT	ﾎﾞﾙﾄ	12	
41	25953-72011		BOLT	ﾎﾞﾙﾄ	4	

FIG.33 STEERING WHEEL UNIT

(F7C34110) ｽﾃｱﾘﾝｸﾞﾎｲｰﾙﾕﾆｯﾄ

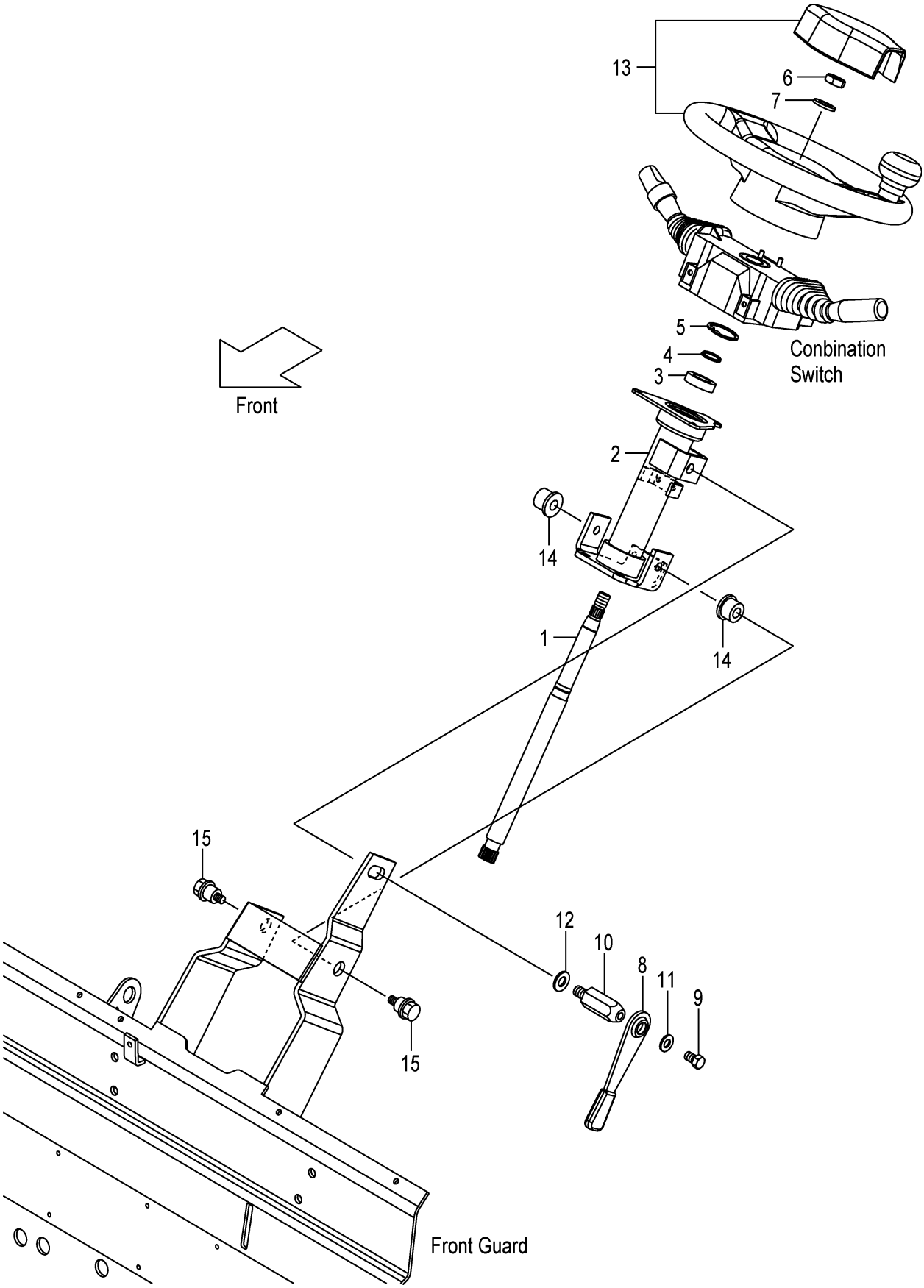

A:FD35T3S

Item No	Part No.	Mark	Description		Req'd	Remarks : Serial No.
1	22N54-12011		SHAFT,STEERING	ｼｬﾌﾄ	1	
2	22N54-12022		TUBE,STEERING-COLUMN	ﾁｭｰﾌﾞ	1	
3	03020-06904		BRG,BALL	ﾍﾞｱﾘﾝｸﾞ	1	
4	02100-00020		RING,SNAP	ﾘﾝｸﾞ	1	
5	02110-00037		RING,SNAP	ﾘﾝｸﾞ	1	
6	01402-10014		NUT	ﾅｯﾄ	1	
7	02000-00014		WASHER	ﾜｯｼｬ	1	
A1	239A4-12402		LEVER-ASSY,TILT-LOCK	ﾃｨﾙﾄﾛｯｸﾚﾊﾞｰｱｯｾﾝ	1	INC.8-11
8	239A4-12411		LEVER	ﾚﾊﾞｰ	1	
9	239A4-12441		BOLT	ﾎﾞﾙﾄ	1	
10	239A4-12431		BOLT,LOCK	ﾎﾞﾙﾄ	1	
11	214A4-12161		WASHER	ﾜｯｼｬ	1	
12	02000-00012		WASHER	ﾜｯｼｬ	1	
13	22N54-10201		WHEEL,STEERING	ﾎｲｰﾙ	1	SEE FIG.35
14	216G4-12101		BUSHING	ﾌﾞｯｼﾝｸﾞ	2	
15	216G4-12111		BOLT	ﾎﾞﾙﾄ	2	

FIG.34 ORBITROL

(F7C34120) オービットロール

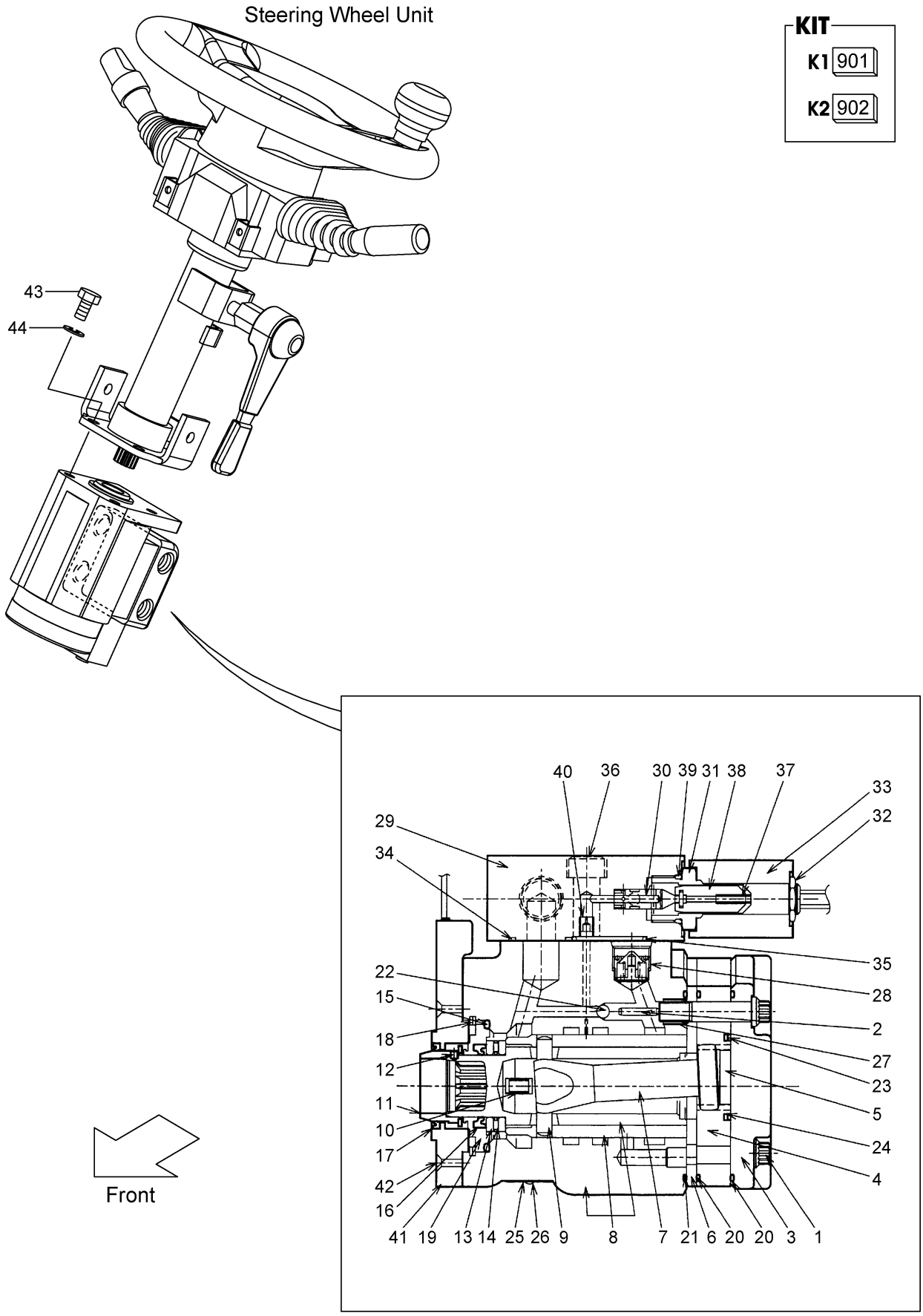

A:FD35T3S

Item No	Part No.	Mark	Description		Req'd	Remarks : Serial No.
A1	22N54-10302		UNIT-ASSY,ORBITROL	オービットロールユニットアッセン	1	INC.1-42
901	22N54-10342	K1	KIT,SEAL	シールキット	1	INC.15-17,20,21,23,24,34, 35,39
902	26094-17021	K2	KIT,BRG,NEEDLE	ニードルベアリングキット	1	INC.13,14
A2	22N54-10322		ORBITROL-ASSY	オービットロールアッセン	1	INC.1-28
1	NO PART NO.	#	SCREW	スクリュ	7	
2	NO PART NO.	#	PIN	ピン	1	
3	NO PART NO.	#	CAP,END	キャップ	1	
4	NO PART NO.	#	GEROTOR	ジロータ	1	
5	NO PART NO.	#	SPACER	スペーサ	1	
6	NO PART NO.	#	PLATE	プレート	1	
7	NO PART NO.	#	DRIVE	ドライブ	1	
8	NO PART NO.	#	PARTS,CONTROL	パーツ	1	
9	NO PART NO.	#	PIN	ピン	1	
10	NO PART NO.	#	SPRING	スプリング	4	
11	NO PART NO.	#	ROTOR	ロータ	1	
12	NO PART NO.	#	SCREW	スクリュ	1	
13	NO PART NO.	#*	BEARING	ベアリング	2	
14	NO PART NO.	#*	NEEDLE	ニードル	1	
15	NO PART NO.	#*	O-RING	Oリング	1	
16	NO PART NO.	#*	SEAL,OIL	シール	1	
17	NO PART NO.	#*	SEAL,DUST	シール	1	
18	NO PART NO.	#	RING	リング	1	
19	NO PART NO.	#	BUSHING	ブッシング	1	
20	NO PART NO.	#*	O-RING	Oリング	2	
21	NO PART NO.	#*	O-RING	Oリング	1	
22	NO PART NO.	#	BALL	ボール	1	
23	NO PART NO.	#*	SEAL,FACE	シール	1	
24	NO PART NO.	#*	O-RING	Oリング	1	
25	NO PART NO.	#	PLATE,NAME	プレート	1	
26	NO PART NO.	#	RIVET	リベット	2	
27	NO PART NO.	#	SCREW	スクリュ	1	
28	NO PART NO.	#	VALVE,CHECK	バルブ	1	
A3	22N54-10371		VALVE-ASSY	バルブアッセン	1	INC.29-40
29	NO PART NO.	#	BLOCK,VALVE	ブロック	1	
30	NO PART NO.	#	SPOOL	スプール	1	
31	NO PART NO.	#	TUBE	チューブ	1	
32	NO PART NO.	#	NUT	ナット	1	
33	NO PART NO.	#	COIL	コイル	1	
34	NO PART NO.	#*	O-RING	Oリング	4	
35	NO PART NO.	#*	O-RING	Oリング	1	
36	NO PART NO.	#	BOLT	ボルト	2	
37	NO PART NO.	#	SPRING	スプリング	1	
38	NO PART NO.	#	CORE	コア	1	
39	NO PART NO.	#*	O-RING	Oリング	1	
40	NO PART NO.	#	PLUG	プラグ	1	
41	22N54-10361		CONTROLLER,EPACS	コントローラ	1	
42	NO PART NO.	#	SCREW	スクリュ	2	
43	01113-10035		BOLT	ボルト	4	

FIG.34 ORBITROL

(F7C34120) オービットロール

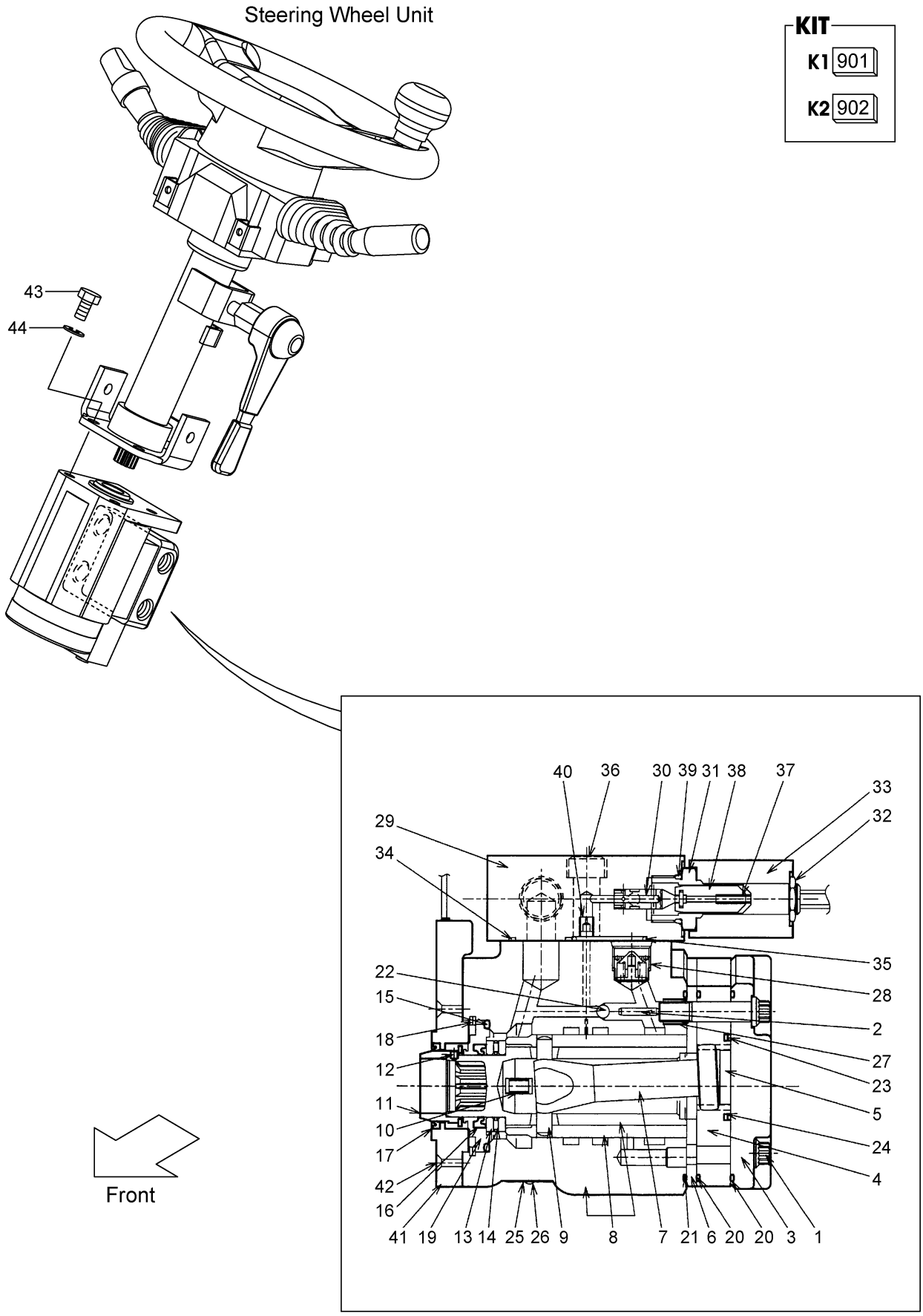

FIG.34

(F7C34120)

A:FD35T3S

Item No	Part No.	Mark	Description	Req'd	Remarks : Serial No.
44	02011-00010		WASHER ﾜｯｼｬ	4	

FIG.35 STEERING WHEEL

(F7C34130) ｽﾃｱﾘﾝｸﾞﾎｲｰﾙ

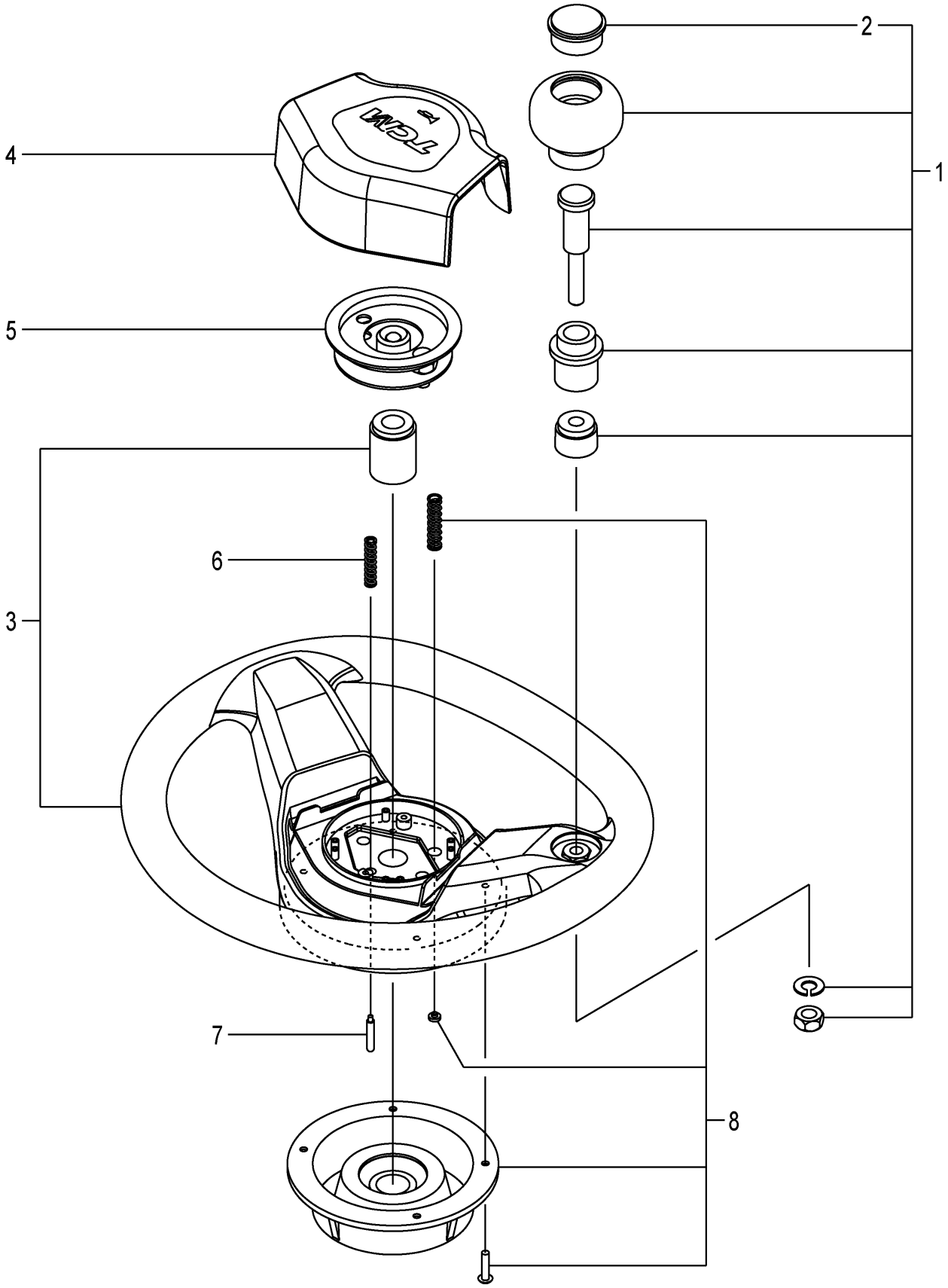

FIG.35

(F7C34130)

A:FD35T3S

Item No	Part No.	Mark	Description		Req'd	Remarks : Serial No.
A1	22N54-10201		WHEEL-ASSY,STEERING	ｽﾃｱﾘﾝｸﾞﾎｲｰﾙｱｯｾﾝ	1	INC.1-8
1	216G4-12681		KNOB	ﾉﾌﾞ	1	INC.2
2	216G4-12711		CAP	ｷｬｯﾌﾟ	1	
3	NO PART NO.	#	WHEEL,STEERING	ﾎｲｰﾙ	1	
4	22N54-12411		PAD,HORN	ﾊﾟｯﾄﾞ	1	
5	22N54-13001		SWITCH	ｽｲｯﾁ	1	
6	22N54-13031		SPRING	ｽﾌﾟﾘﾝｸﾞ	1	
7	22N54-13021		PLUNGER	ﾌﾟﾗﾝｼﾞｬ	1	
8	209K4-12551		COVER,CANCEL-CAM	ｶﾊﾞｰ	1	

FIG.36 ORBITROL FITTING

(F7C34140) オービットロールフィッティング

Steering Wheel Unit

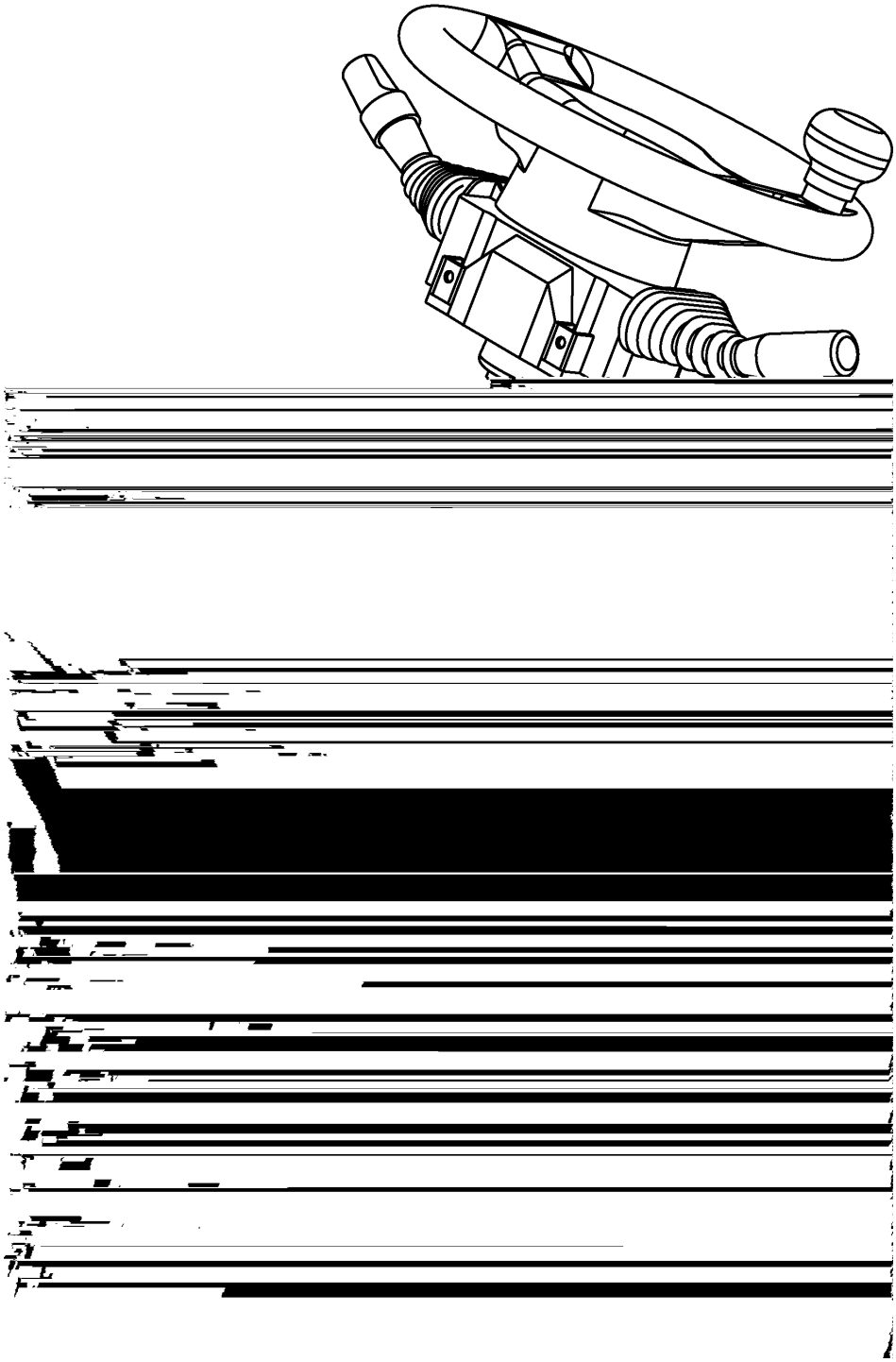

FIG.36

(F7C34140)

A:FD35T3S

Item No	Part No.	Mark	Description		Req'd	Remarks : Serial No.
A1	20387-63741		ELBOW-ASSY	ｴﾙﾎﾞｱｯｾﾝ	1	INC.1,2
1	NO PART NO.	#	ELBOW	ｴﾙﾎﾞ	1	
2	03320-00140		O-RING	Oﾘﾝｸﾞ	1	
A2	234H7-60351		FITTING-ASSY,HOSE	ﾎｰｽﾌｨｯﾃｨﾝｸﾞｱｯｾﾝ	1	INC.3,4
3	NO PART NO.	#	FITTING,HOSE	ﾌｨｯﾃｨﾝｸﾞ	1	
4	03320-00140		O-RING	Oﾘﾝｸﾞ	1	
A3	283A7-62501		ELBOW-ASSY	ｴﾙﾎﾞｱｯｾﾝ	2	INC.5,6
5	NO PART NO.	#	ELBOW	ｴﾙﾎﾞ	2	
6	03320-00140		O-RING	Oﾘﾝｸﾞ	2	

FIG.37 STEERING AXLE

(F7C34310) ステアリング゛アクスル

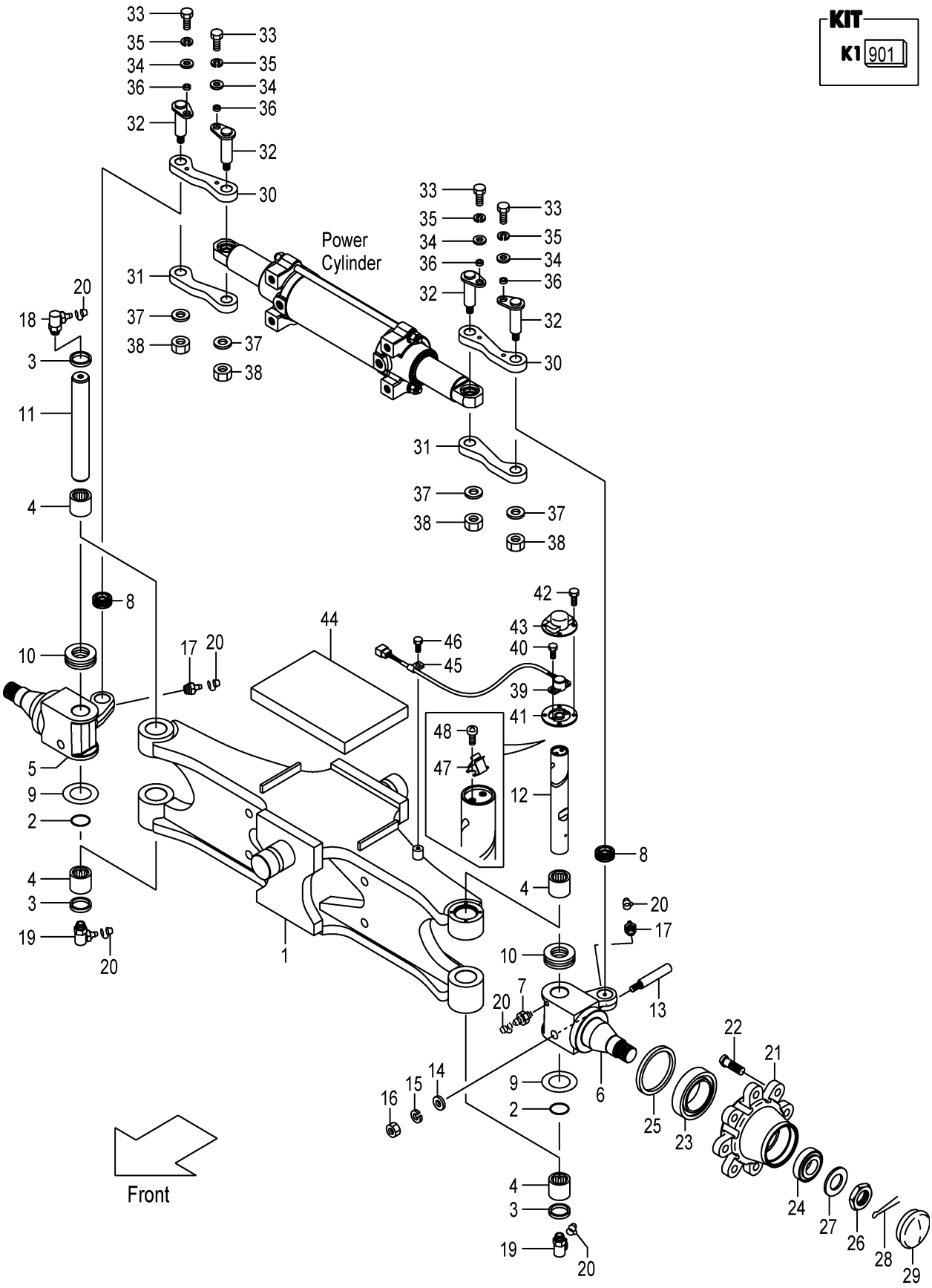

A:FD35T3S

Item No	Part No.	Mark	Description		Req'd	Remarks : Serial No.
A1	22Y54-30101		AXLE-ASSY,STEERING	ｽﾃｱﾘﾝｸﾞｱｸｽﾙｱｯｾﾝ	1	INC.1-29
901	215E4-39801	K1	KIT,REPAIR	ﾘﾍﾟｱｷｯﾄ	1	INC.2-4,9,10,13-16,18
1	22Y54-30121		AXLE,STEERING	ｱｸｽﾙ	1	
2	23654-32161	*	O-RING	Oﾘﾝｸﾞ	2	
3	214A4-32161	*	SEAL,DUST	ｼｰﾙ	3	
4	03146-13201	*	BRG,NEEDLE	ﾍﾞｱﾘﾝｸﾞ	4	
5	22Y54-32501		KNUCKLE,RH	ﾅｯｸﾙ	1	
6	22Y54-32511		KNUCKLE,LH	ﾅｯｸﾙ	1	
7	04901-00100		FITTING	ﾌｨｯﾃｨﾝｸﾞ	1	
8	215E4-52231		JOINT,SPHERE-FACE	ｼﾞｮｲﾝﾄ	2	
9	22214-30321	*	SHIM,T-0.2	ｼﾑ	6	
10	03126-83201	*	BRG,THRUST	ﾍﾞｱﾘﾝｸﾞ	2	
11	24454-32232		KINGPIN	ｷﾝｸﾞﾋﾟﾝ	1	
12	22N54-32261		KINGPIN	ｷﾝｸﾞﾋﾟﾝ	1	
13	215E4-32341	*	PIN,LOCK	ﾋﾟﾝ	2	
14	02000-00010	*	WASHER	ﾜｯｼｬ	2	
15	02010-00010	*	WASHER	ﾜｯｼｬ	2	
16	01400-00010	*	NUT	ﾅｯﾄ	2	
17	214A8-52051		FITTING	ﾌｨｯﾃｨﾝｸﾞ	2	
18	04901-00190	*	FITTING	ﾌｨｯﾃｨﾝｸﾞ	1	
19	04901-00191		FITTING	ﾌｨｯﾃｨﾝｸﾞ	2	
20	22199-12401		CAP,NIPPLE	ｷｬｯﾌﾟ	6	
21	214A4-32041		HUB,REAR	ﾊﾌﾞ	2	
22	23654-32041		BOLT,HUB	ﾎﾞﾙﾄ	16	
23	03071-30211		BRG,TAPER-ROLLER	ﾍﾞｱﾘﾝｸﾞ	2	
24	03071-30207		BRG,TAPER-ROLLER	ﾍﾞｱﾘﾝｸﾞ	2	
25	03217-08501		SEAL,OIL	ｼｰﾙ	2	
26	01412-00030		NUT,CASTLE	ﾅｯﾄ	2	
27	02000-00030		WASHER	ﾜｯｼｬ	2	
28	02200-06055		PIN,COTTER	ﾋﾟﾝ	2	
29	214A4-32051		CAP	ｷｬｯﾌﾟ	2	
30	22Y54-33151		YOKE,UPPER	ﾖｰｸ	2	
31	22Y54-33161		YOKE,LOWER	ﾖｰｸ	2	
32	22Y54-33171		PIN	ﾋﾟﾝ	4	
33	01103-08016		BOLT	ﾎﾞﾙﾄ	4	
34	02000-00008		WASHER	ﾜｯｼｬ	4	
35	02011-00008		WASHER	ﾜｯｼｬ	4	
36	22N54-32181		COLLAR	ｶﾗｰ	4	
37	256C9-52372		WASHER	ﾜｯｼｬ	4	
38	271F6-42531		NUT,SELF-LOCK	ﾅｯﾄ	4	
39	22N54-32211		POTENTIOMETER	ﾎﾟﾃﾝｼｵﾒｰﾀ	1	
40	01185-04010		BOLT	ﾎﾞﾙﾄ	2	
41	22N54-32222		ADAPTER	ｱﾀﾞﾌﾟﾀ	1	
42	01030-06010		BOLT	ﾎﾞﾙﾄ	4	
43	22N54-32241		COVER,POTENTIOMETER	ｶﾊﾞｰ	1	
44	22N54-32402		RUBBER	ﾗﾊﾞｰ	1	
45	26602-42041		CLIP	ｸﾘｯﾌﾟ	1	
46	01185-08016		BOLT	ﾎﾞﾙﾄ	1	
47	22N54-33051		SPRING	ｽﾌﾟﾘﾝｸﾞ	1	
48	01030-05008		SCREW	ｽｸﾘｭ	2	

FIG.38 AXLE SUPPORT

(F7C34340) アクスルサポート

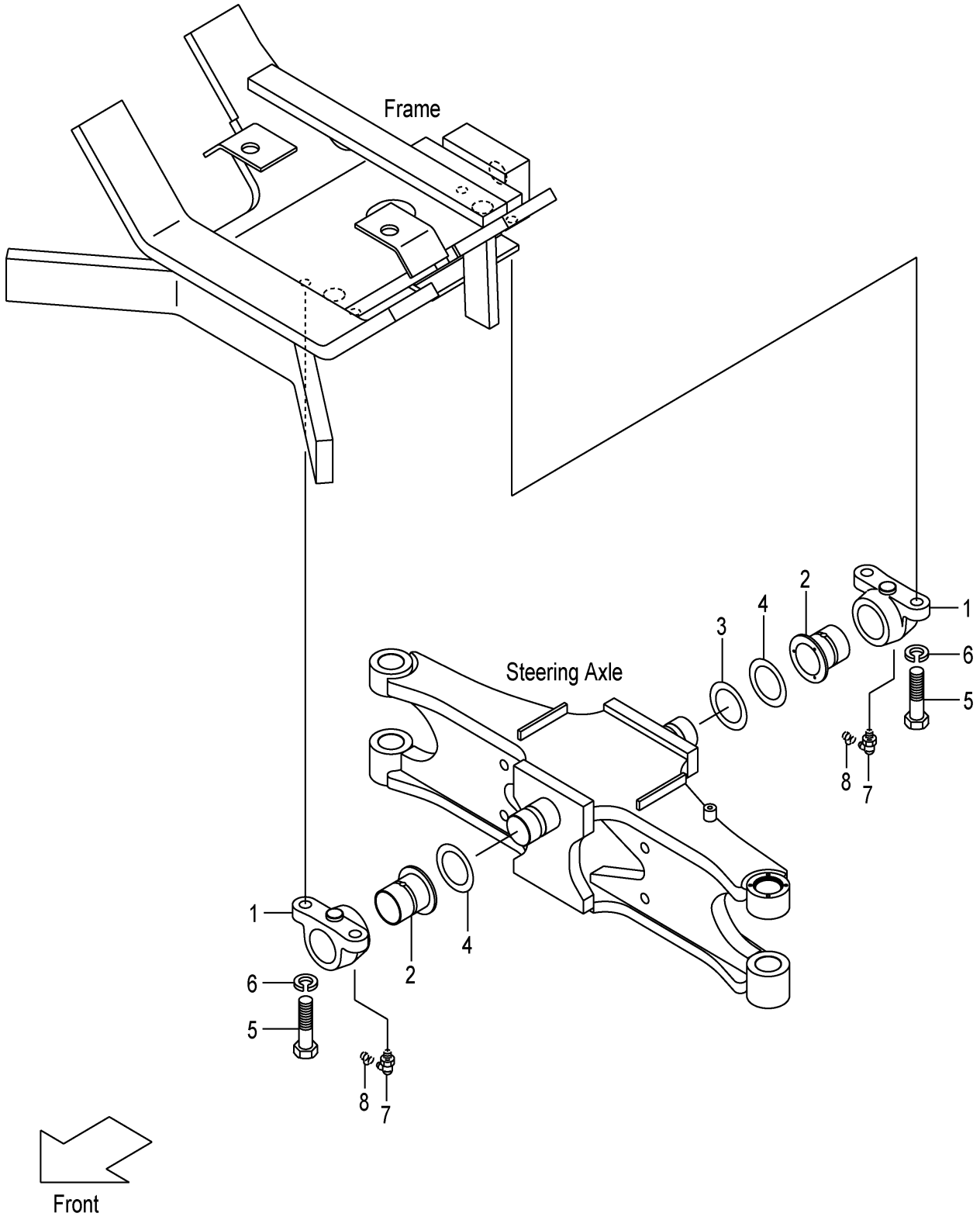

FIG.38

(F7C34340)

A:FD35T3S

Item No	Part No.	Mark	Description		Req'd	Remarks : Serial No.
1	22N54-32311		SUPPORT,REAR-AXLE	ｻﾎﾟｰﾄ	2	
2	22N54-32321		BUSHING,AXLE-SUPPORT	ﾌﾞｯｼﾝｸﾞ	2	
3	214A4-32201		SHIM,T-0.5	ｼﾑ	1	
4	214A4-32211		SHIM,T-1.0	ｼﾑ	2	
5	01100-16045		BOLT	ﾎﾞﾙﾄ	4	
6	02010-00016		WASHER	ﾜｯｼｬ	4	
7	04901-00190		FITTING	ﾌｨｯﾃｨﾝｸﾞ	2	
8	22199-12401		CAP,NIPPLE	ｷｬｯﾌﾟ	2	

FIG.39 HUB NUT

(F7C34410) ﾊﾌﾞﾅｯﾄ

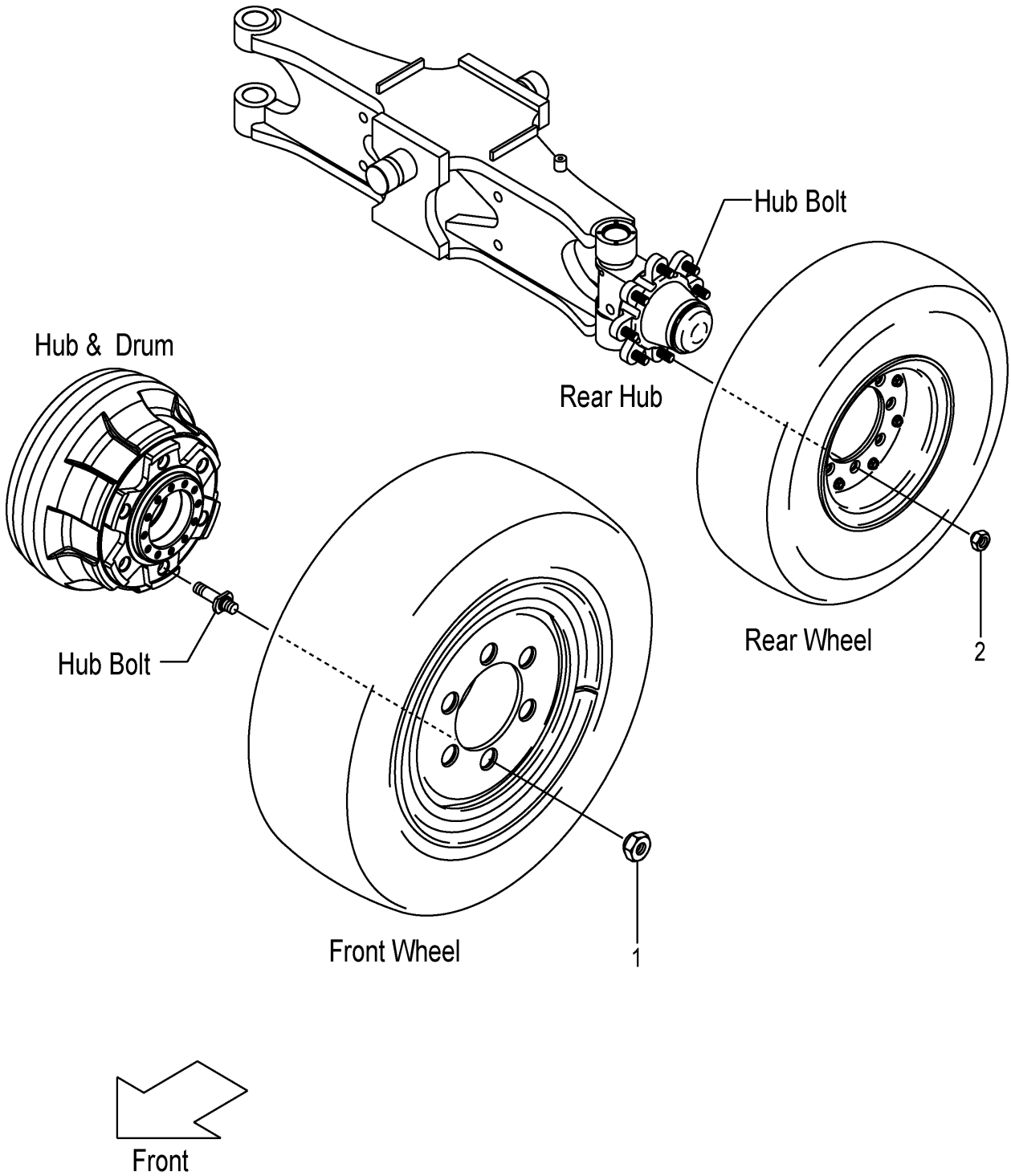

FIG.39

(F7C34410)

A:FD35T3S

Item No	Part No.	Mark	Description	Req'd	Remarks : Serial No.
1	23913-02041		NUT,HUB ﾅｯﾄ	12	(FRONT)
2	23654-34051		NUT,HUB ﾅｯﾄ	16	(REAR)

FIG.40 FENDER

(F7C34420) ﾌｪﾝﾀﾞ

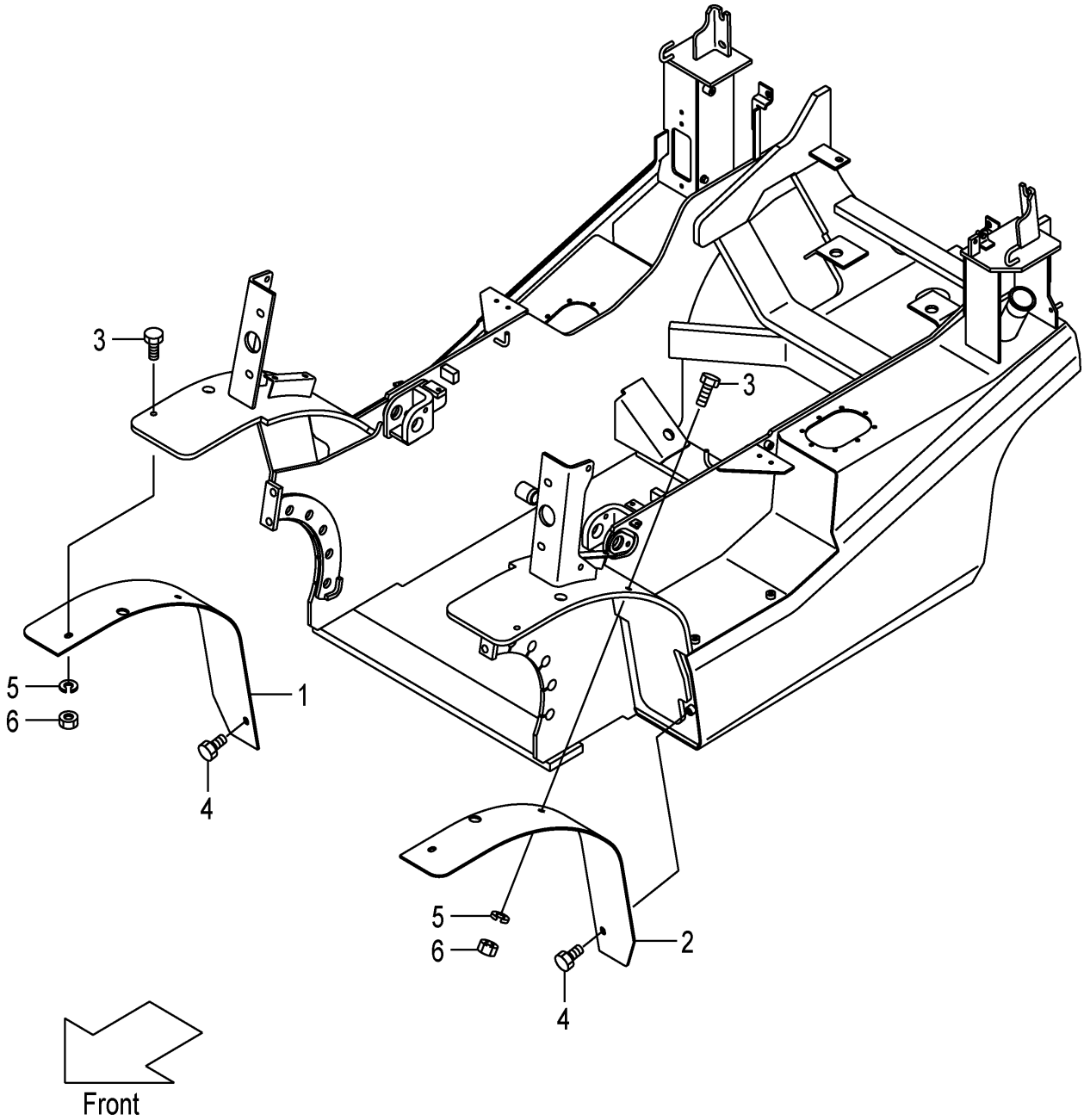

FIG.40

(F7C34420)

A:FD35T3S

Item No	Part No.	Mark	Description		Req'd	Remarks : Serial No.
1	22Y56-12501		FENDER,FRONT,RH	ﾌｪﾝﾀﾞ	1	
2	22Y56-12511		FENDER,FRONT,LH	ﾌｪﾝﾀﾞ	1	
3	534A7-42231		BOLT	ﾎﾞﾙﾄ	4	
4	216G6-43231		BOLT	ﾎﾞﾙﾄ	2	
5	02010-20010		WASHER	ﾜｯｼｬ	4	
6	234A8-42561		NUT	ﾅｯﾄ	4	

FIG.41 FRONT WHEEL

(F7C34430) フロントホイール

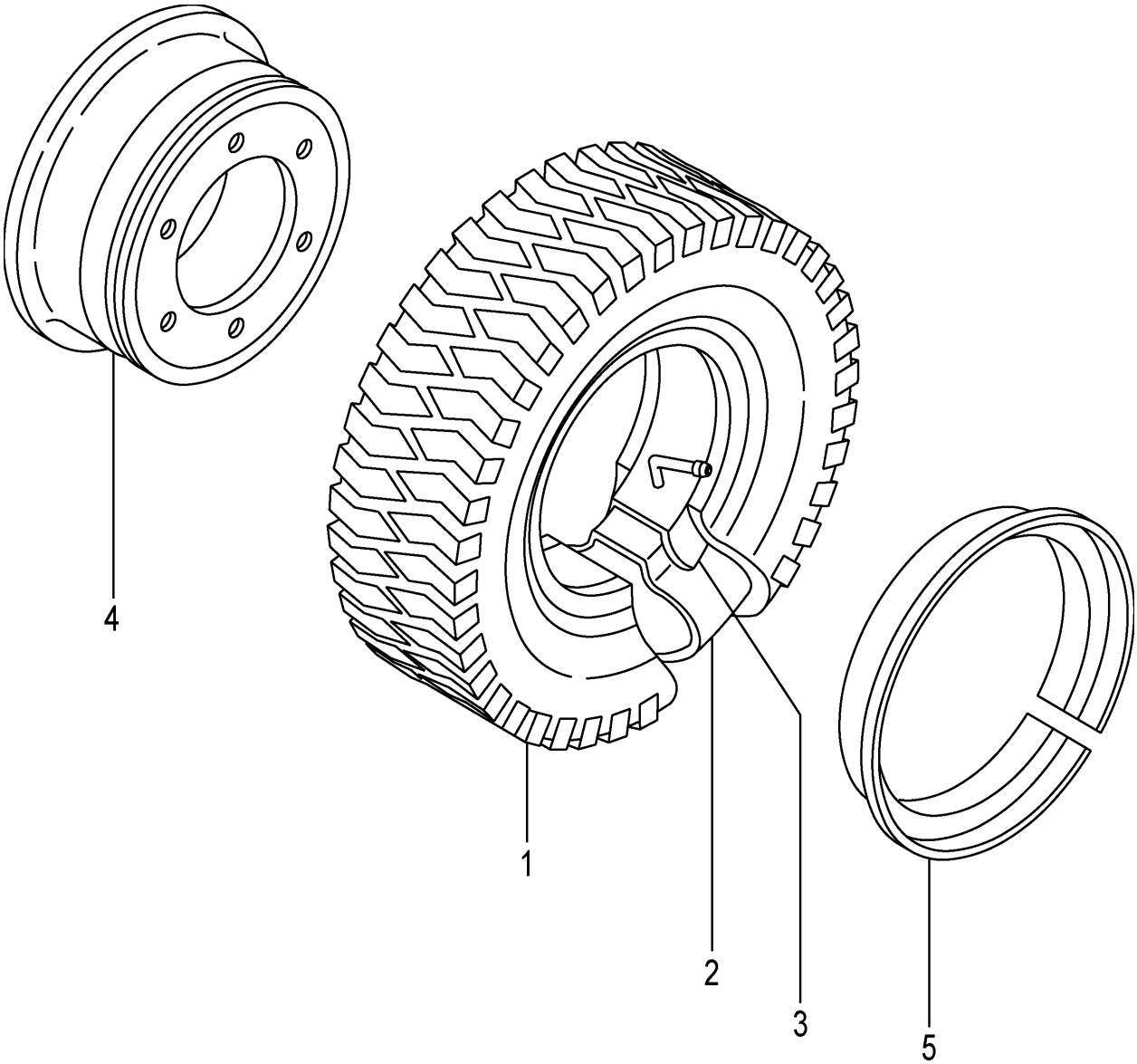

A:FD35T3S

Item No	Part No.	Mark	Description		Req'd	Remarks : Serial No.
A1	22Y54-40051		WHEEL-ASSY,FRONT	ﾌﾛﾝﾄﾎｲｰﾙｱｯｾﾝ	2	INC.1-5
1	06006-25015		TIRE,250-15-16	ﾀｲﾔ	2	
2	06711-25015		TUBE,250-15-16T	ﾁｭｰﾌﾞ	2	
3	06701-25015		FLAP,250-15-16F	ﾌﾗｯﾌﾟ	2	
A3	22Y54-40201		RIM-ASSY,250-15-16	ﾘﾑｱｯｾﾝ	2	INC.4,5
4	NO PART NO.	#	RIM & DISK	ﾘﾑ & ﾃﾞｨｽｸ	2	
5	NO PART NO.		RING,SIDE	ﾘﾝｸﾞ	2	

FIG.42 REAR WHEEL

(F7C344F0) リヤーホイール

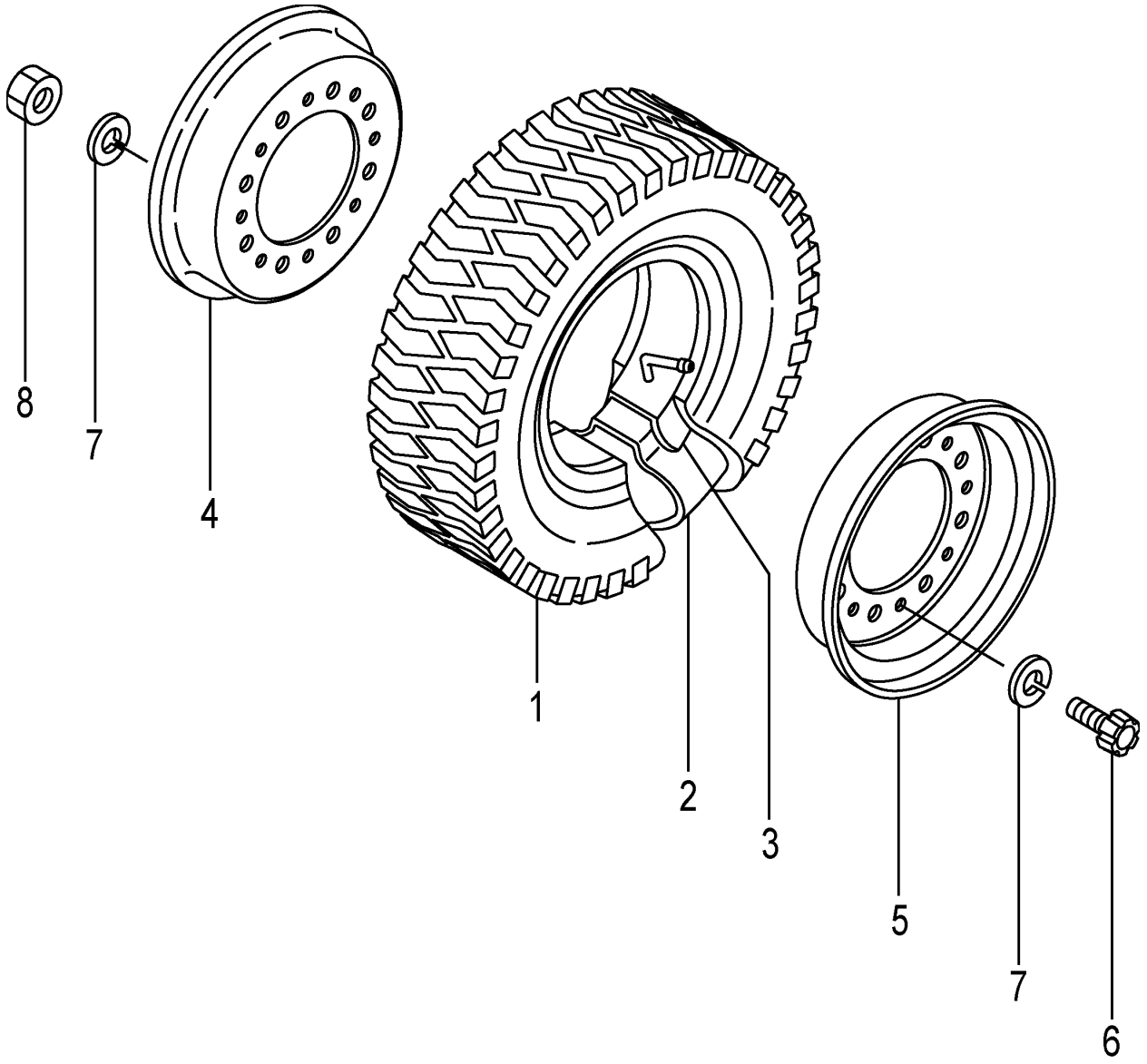

A:FD35T3S

Item No	Part No.	Mark	Description		Req'd	Remarks : Serial No.
A1	22Y54-40151		WHEEL-ASSY,REAR	ﾘﾔｰﾎｲｰﾙｱｯｾﾝ	2	INC.1-8
1	06012-65010		TIRE,650-10-12	ﾀｲﾔ	2	
2	NO PART NO.		TUBE,650-10-10T	ﾁｭｰﾌﾞ	2	
3	NO PART NO.		FLAP,650-10-10F	ﾌﾗｯﾌﾟ	2	
A2	52356-80302		RIM-ASSY,500F-10	ﾘﾑｱｯｾﾝ	2	INC.4-8
4	NO PART NO.	#	RIM,INSIDE	ﾘﾑ	2	
5	NO PART NO.	#	RIM,OUTSIDE	ﾘﾑ	2	
6	534F3-82001		BOLT	ﾎﾞﾙﾄ	16	
7	02011-00012		WASHER	ﾜｯｼｬ	32	
8	01400-00012		NUT	ﾅｯﾄ	16	

FIG.43 POWER CYLINDER

(F7C34510) ﾊﾟﾜｰｼﾘﾝﾀﾞ

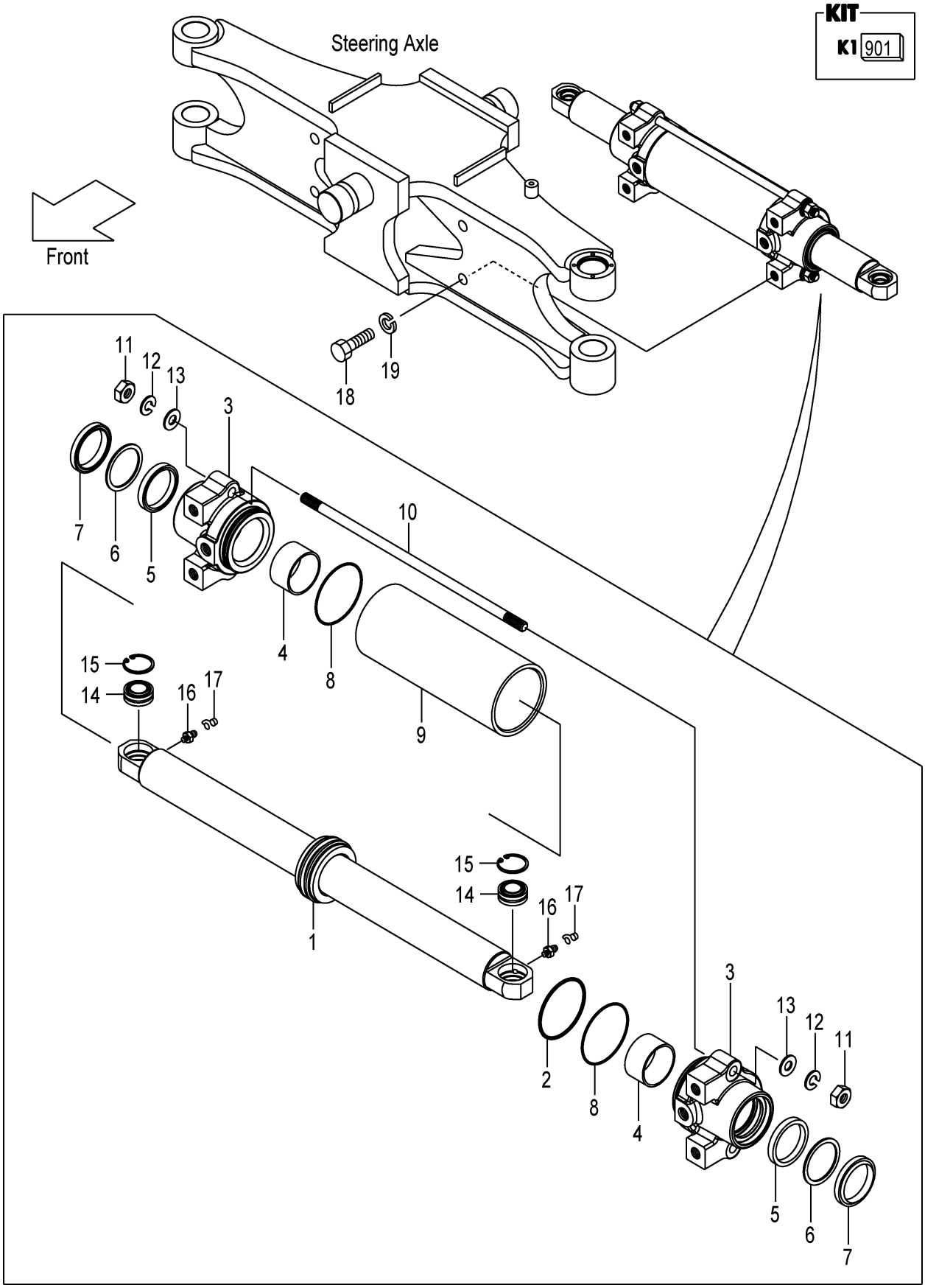

FIG.43

(F7C34510)

A:FD35T3S

Item No	Part No.	Mark	Description		Req'd	Remarks : Serial No.
A1	22Y54-50201		CYL-ASSY,PS	ﾊﾟﾜｽﾃｼﾘﾝﾀﾞｱｯｾﾝ	1	INC.1-17
901	22N54-59801	K1	KIT,OVERHAUL	ｵｰﾊﾞﾎｰﾙｷｯﾄ	1	INC.2,5-8
A2	22N54-50221		ROD-ASSY,PISTON	ﾋﾟｽﾄﾝﾛｯﾄﾞｱｯｾﾝ	1	INC.1,2
1	22N54-52001		ROD,PISTON	ﾛｯﾄﾞ	1	
2	514A2-42201	*	SEAL	ｼｰﾙ	1	
3	22N54-52101		CAP,CYL	ｷｬｯﾌﾟ	2	
4	23460-53171		BUSHING,DU	ﾌﾞｯｼﾝｸﾞ	2	
5	97103-35431	*	PACKING	ﾊﾟｯｷﾝｸﾞ	2	
6	22658-52301	*	RING,BACK-UP	ﾘﾝｸﾞ	2	
7	22N54-52141	*	SEAL,DUST	ｼｰﾙ	2	
8	03350-00750	*	O-RING	Oﾘﾝｸﾞ	2	
9	22Y54-52201		BODY,CYL	ﾎﾞﾃﾞｨ	1	
10	22Y54-52251		BOLT	ﾎﾞﾙﾄ	2	
11	01400-00012		NUT	ﾅｯﾄ	4	
12	02010-00012		WASHER	ﾜｯｼｬ	4	
13	02000-00012		WASHER	ﾜｯｼｬ	4	
14	215E4-52231		JOINT,SPHERE-FACE	ｼﾞｮｲﾝﾄ	2	
15	02110-00035		RING,SNAP	ﾘﾝｸﾞ	2	
16	214A8-52051		NIPPLE,GREASE	ﾆｯﾌﾟﾙ	2	
17	22199-12401		CAP,NIPPLE	ｷｬｯﾌﾟ	2	
18	01100-16055		BOLT	ﾎﾞﾙﾄ	4	
19	02010-00016		WASHER	ﾜｯｼｬ	4	

FIG.44 OVERHEAD GUARD

(F7C35110) オーバ゛ヘッド゛カ゛ード゛

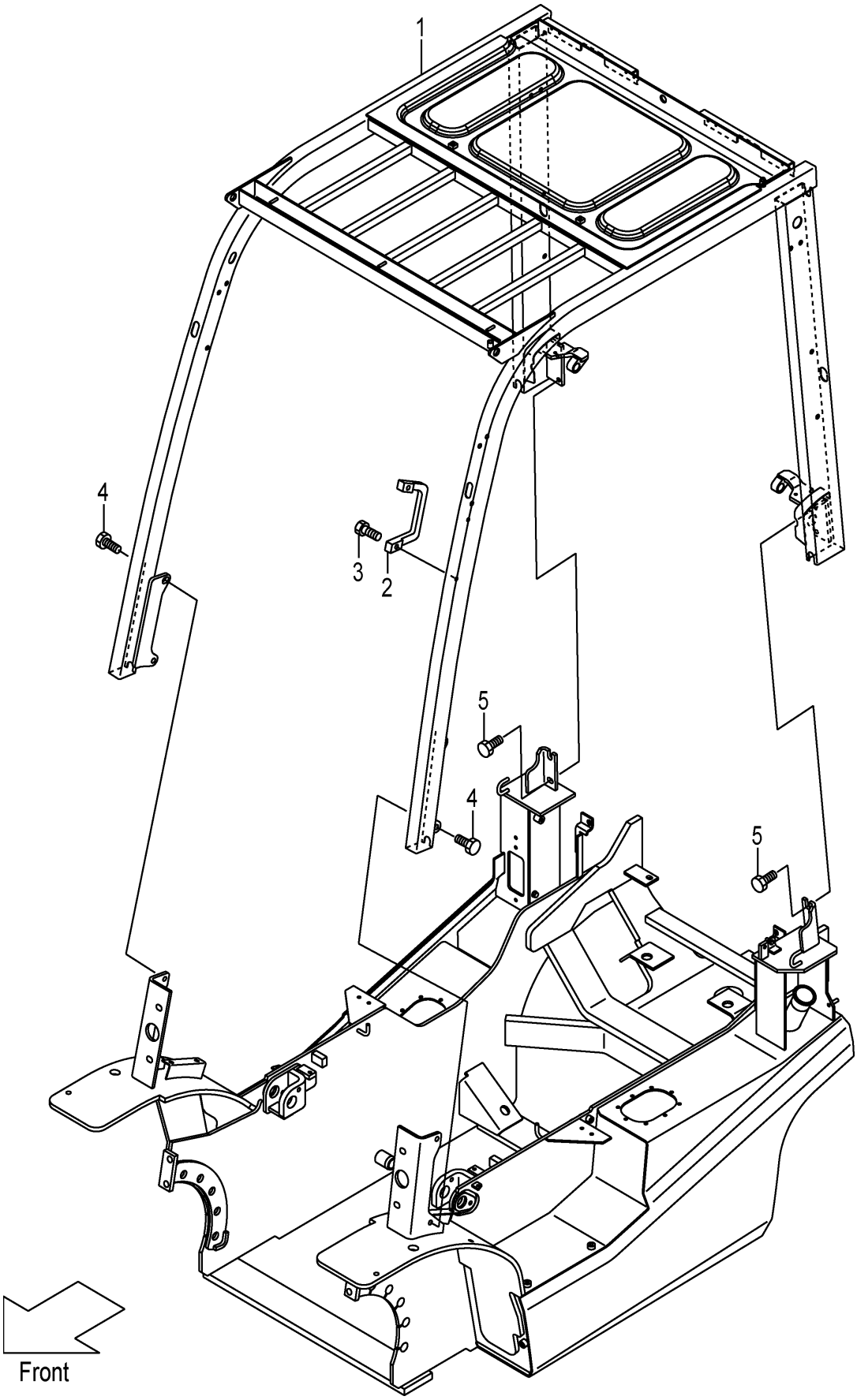

FIG.44

(F7C35110)

A:FD35T3S

Item No	Part No.	Mark	Description		Req'd	Remarks : Serial No.
1	22Y55-10161		GUARD,HEAD	ｶﾞｰﾄﾞ	1	
2	516G5-13051		GRIP	ｸﾞﾘｯﾌﾟ	1	
3	01171-06025		BOLT	ﾎﾞﾙﾄ	2	
4	01186-12040		BOLT	ﾎﾞﾙﾄ	4	
5	01186-12025		BOLT	ﾎﾞﾙﾄ	4	

FIG.45 FRONT LAMP BRACKET

(F7C35130) フロントランプブラケット

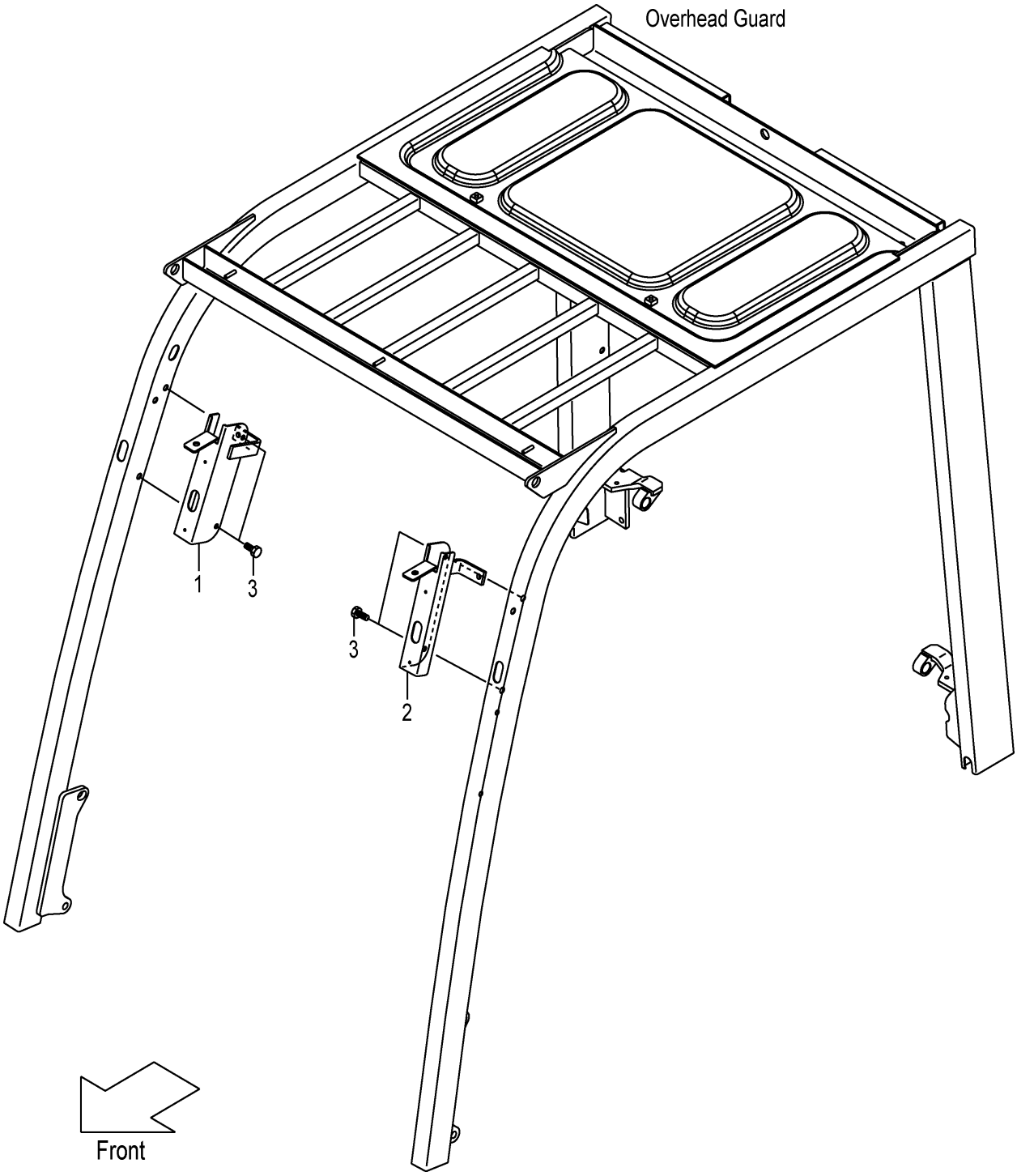

FIG.45

(F7C35130)

A:FD35T3S

Item No	Part No.	Mark	Description	Req'd	Remarks : Serial No.
1	22N55-12271		BRACKET,HEAD-LAMP,RH ﾌﾞﾗｹｯﾄ	1	
2	22N55-12281		BRACKET,HEAD-LAMP,LH ﾌﾞﾗｹｯﾄ	1	
3	514A5-12021		BOLT ﾎﾞﾙﾄ	4	

FIG.46 REAR LAMP COVER

(F7C35150) ﾘﾔｰﾗﾝﾌﾟｶﾊﾞｰ

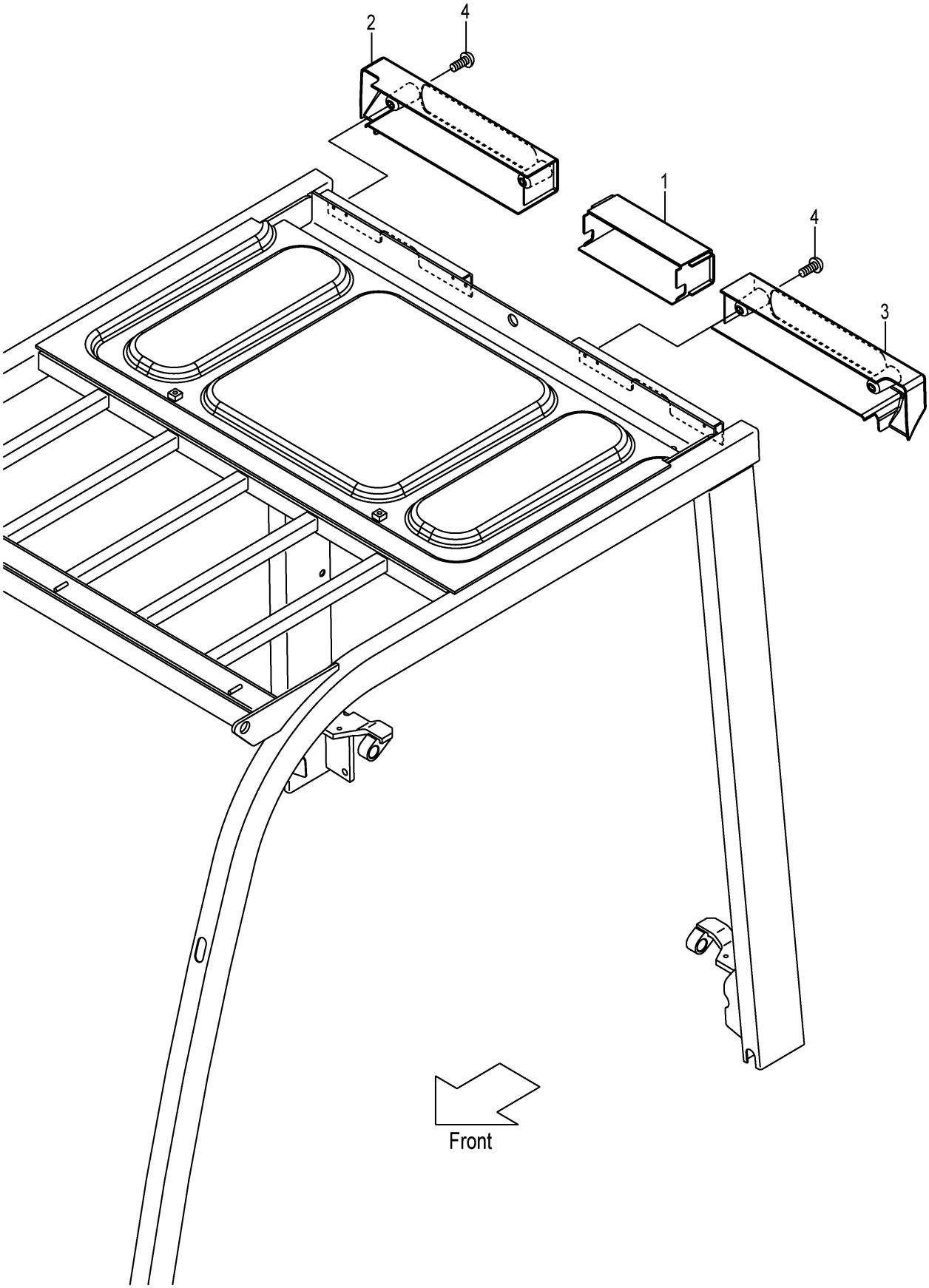

FIG.46

(F7C35150)

A:FD35T3S

Item No	Part No.	Mark	Description	Req'd	Remarks : Serial No.
1	22N55-12701		COVER,REAR-LAMP ｶﾊﾞｰ	1	
2	22N55-12711		COVER,REAR-LAMP,RH ｶﾊﾞｰ	1	
3	22N55-12721		COVER,REAR-LAMP,LH ｶﾊﾞｰ	1	
4	214A6-42252		SCREW ｽｸﾘｭ	4	

FIG.47 HEAD GUARD PARTS

(F7C351A0) ﾍｯﾄﾞｶﾞｰﾄﾞﾊﾟｰﾂ

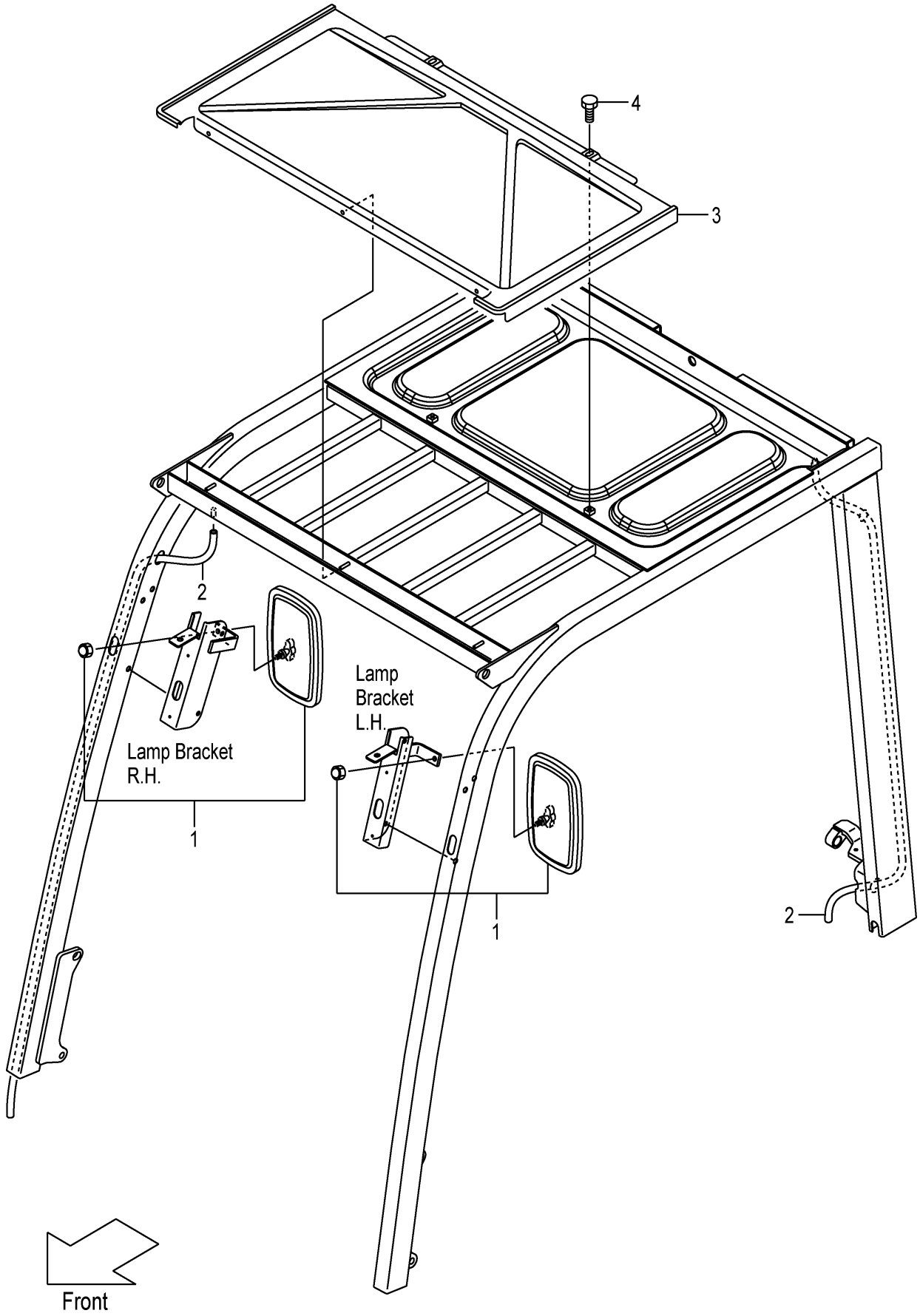

FIG.47

(F7C351A0)

A:FD35T3S

Item No	Part No.	Mark	Description		Req'd	Remarks : Serial No.
1	239A9-92001		MIRROR	ﾐﾗｰ	2	
2	534A5-00401		HOSE,VINYL	ﾎｰｽ	2	
3	22N55-12901		CANVAS	ｷｬﾝﾊﾞｽ	1	
4	01185-08016		BOLT	ﾎﾞﾙﾄ	2	

FIG.48 POP RIVET

(F7C351B0) ﾎﾟｯﾌﾟﾘﾍﾞｯﾄ

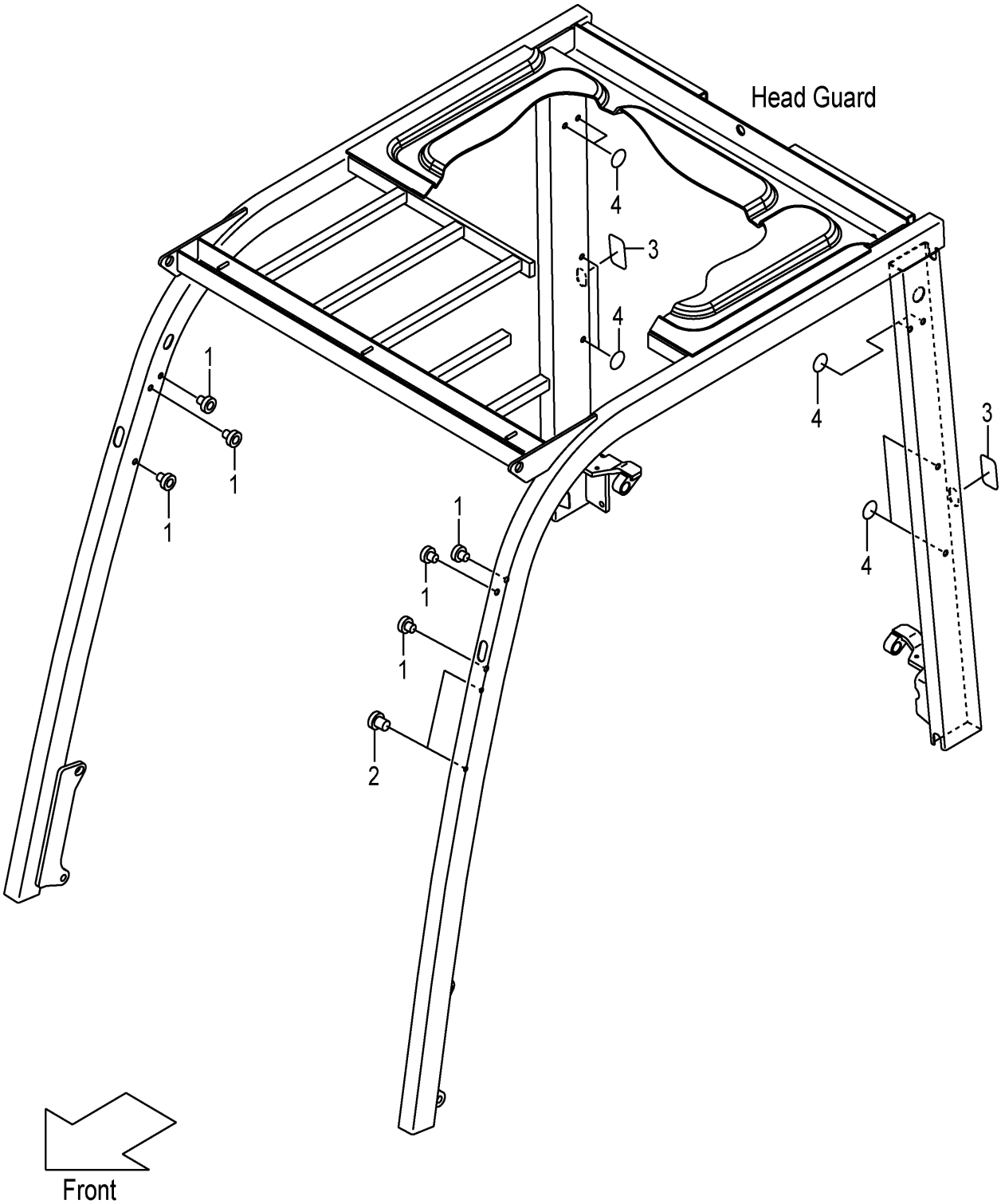

FIG.48

(F7C351B0)

A:FD35T3S

Item No	Part No.	Mark	Description		Req'd	Remarks : Serial No.
1	514A5-12011		RIVET,POP	ﾘﾍﾞｯﾄ	6	
2	516G5-13151		RIVET,POP	ﾘﾍﾞｯﾄ	2	
3	22N55-13191		SEAT,HG	ｼｰﾄ	2	
4	22N55-13181		SEAL,PANEL-COVER	ｼｰﾙ	8	

FIG.49 ACCEL PEDAL

(F7C35220) アクセルペダル

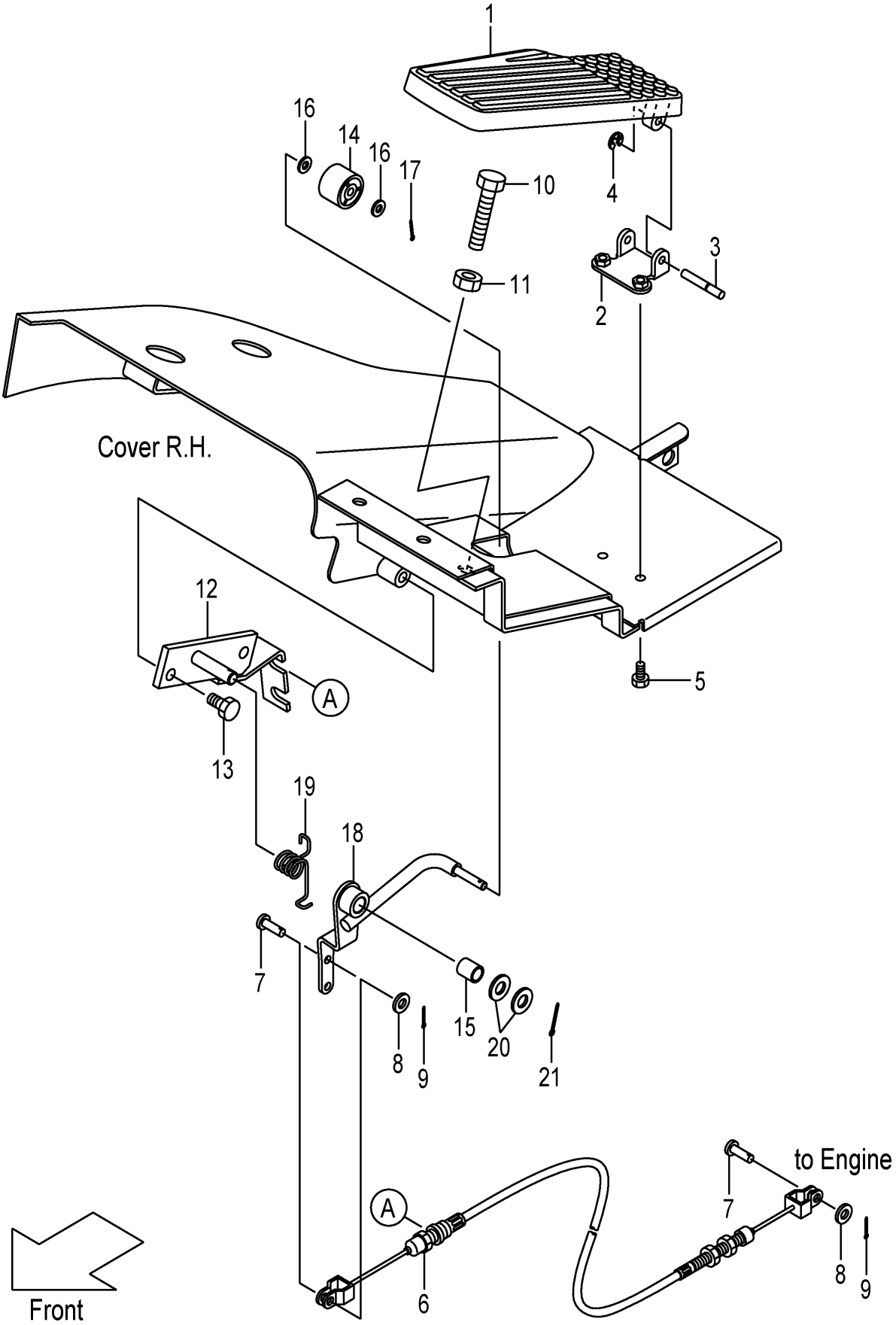

A:FD35T3S

Item No	Part No.	Mark	Description		Req'd	Remarks : Serial No.
A1	22N55-20211		PEDAL-ASSY,ACCEL	ｱｸｾﾙﾍﾟﾀﾞﾙｱｯｾﾝ	1	INC.1-4
1	NO PART NO.	#	PEDAL	ﾍﾟﾀﾞﾙ	1	
2	NO PART NO.	#	SUPPORT	ｻﾎﾟｰﾄ	1	
3	22N55-22121		SHAFT	ｼｬﾌﾄ	1	
4	22N55-22131		E-RING	Eﾘﾝｸﾞ	1	
5	01183-06012		BOLT	ﾎﾞﾙﾄ	2	
6	20J75-22201		CABLE,ACCEL	ｹｰﾌﾞﾙ	1	
7	02262-06015		PIN,CLEVIS	ﾋﾟﾝ	2	
8	02000-00006		WASHER	ﾜｯｼｬ	2	
9	02200-16015		PIN,COTTER	ﾋﾟﾝ	2	
10	01120-10040		BOLT	ﾎﾞﾙﾄ	1	
11	01400-00010		NUT	ﾅｯﾄ	1	
12	20A75-22001		BRACKET,ACCEL-LINK	ﾌﾞﾗｹｯﾄ	1	
13	01185-08016		BOLT	ﾎﾞﾙﾄ	2	
A2	20A75-20201		LINK-ASSY,ACCEL	ｱｸｾﾙﾘﾝｸｱｯｾﾝ	1	INC.14-18
14	214A5-22001		ROLLER	ﾛｰﾗ	1	
15	256C1-12111		BUSHING	ﾌﾞｯｼﾝｸﾞ	1	
16	02000-00006		WASHER	ﾜｯｼｬ	2	
17	02200-16010		PIN,COTTER	ﾋﾟﾝ	1	
18	NO PART NO.	#	LINK,ACCEL	ﾘﾝｸ	1	
19	22N55-22031		SPRING	ｽﾌﾟﾘﾝｸﾞ	1	
20	02000-00012		WASHER	ﾜｯｼｬ	2	
21	02200-03020		PIN,COTTER	ﾋﾟﾝ	1	

FIG.50 FOOT PEDAL

(F7C35420) フットペダル

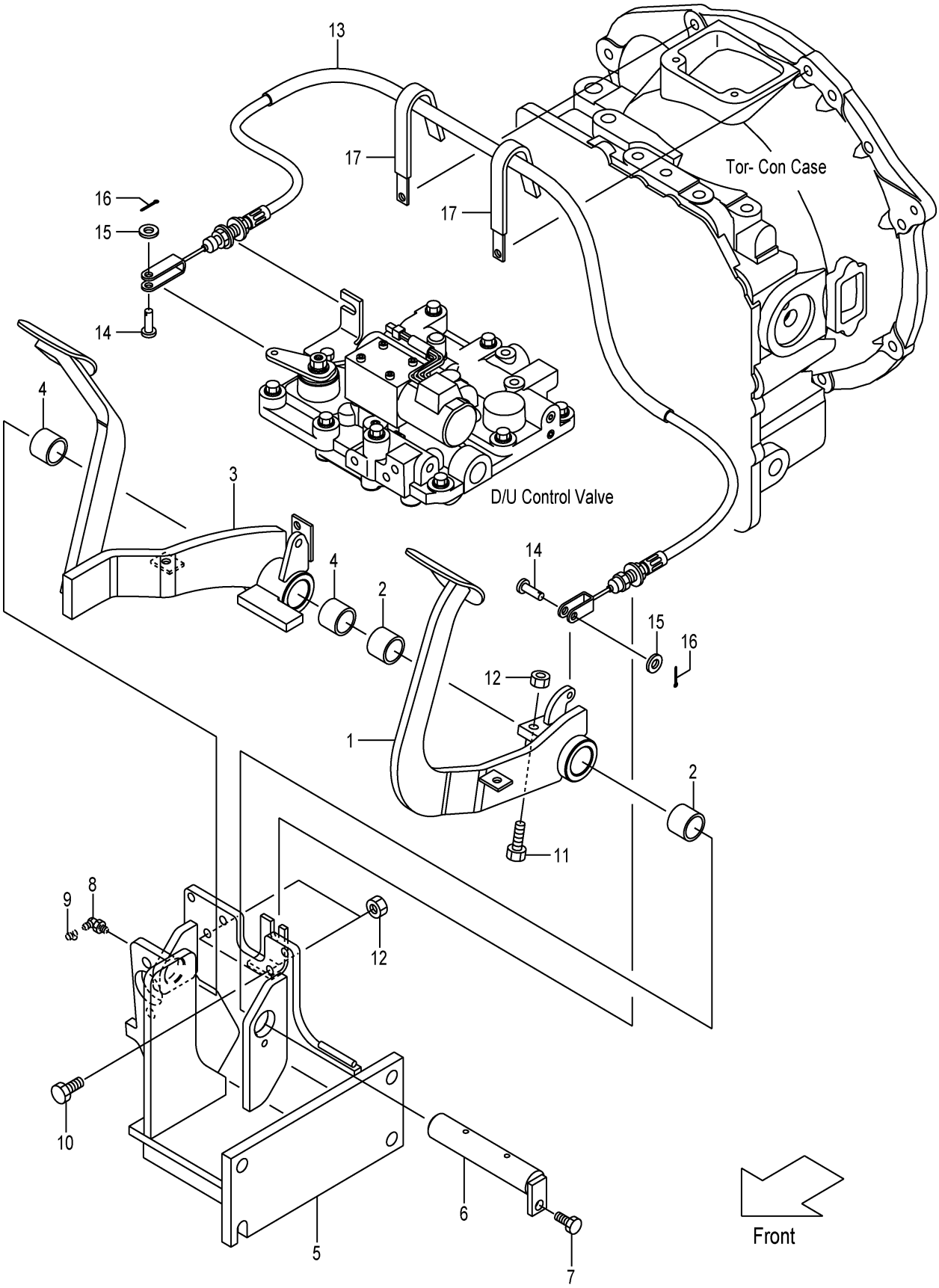

A:FD35T3S

Item No	Part No.	Mark	Description		Req'd	Remarks : Serial No.
A1	22N55-40403		PEDAL-ASSY,INCHING	ｲﾝﾁﾝｸﾞﾍﾟﾀﾞﾙｱｯｾﾝ	1	INC.1,2
1	NO PART NO.	#	PEDAL,INCHING	ﾍﾟﾀﾞﾙ	1	
2	23655-42421		BUSHING,PEDAL	ﾌﾞｯｼﾝｸﾞ	2	
A2	22N55-40303		PEDAL-ASSY,BRAKE	ﾌﾞﾚｰｷﾍﾟﾀﾞﾙｱｯｾﾝ	1	INC.3,4
3	NO PART NO.	#	PEDAL,BRAKE	ﾍﾟﾀﾞﾙ	1	
4	23655-42421		BUSHING,PEDAL	ﾌﾞｯｼﾝｸﾞ	2	
5	22N55-40202		BRACKET,PEDAL	ﾌﾞﾗｹｯﾄ	1	
6	22N55-42101		SHAFT,PEDAL	ｼｬﾌﾄ	1	
7	01183-08016		BOLT	ﾎﾞﾙﾄ	1	
8	04901-00190		FITTING	ﾌｨｯﾃｨﾝｸﾞ	1	
9	22199-12401		CAP,NIPPLE	ｷｬｯﾌﾟ	1	
10	01100-10025		BOLT	ﾎﾞﾙﾄ	2	
11	01120-10040		BOLT	ﾎﾞﾙﾄ	1	
12	01402-00010		NUT	ﾅｯﾄ	3	
13	22N55-42601		CABLE,INCHING	ｹｰﾌﾞﾙ	1	
14	02262-06020		PIN,CLEVIS	ﾋﾟﾝ	2	
15	02000-00006		WASHER	ﾜｯｼｬ	2	
16	02200-16015		PIN,COTTER	ﾋﾟﾝ	2	
17	22N55-42191		CLIP	ｸﾘｯﾌﾟ	2	

FIG.51 FOOT PEDAL CYLINDER

(F7C35450) ﾌｯﾄﾍﾟﾀﾞﾙｼﾘﾝﾀﾞ

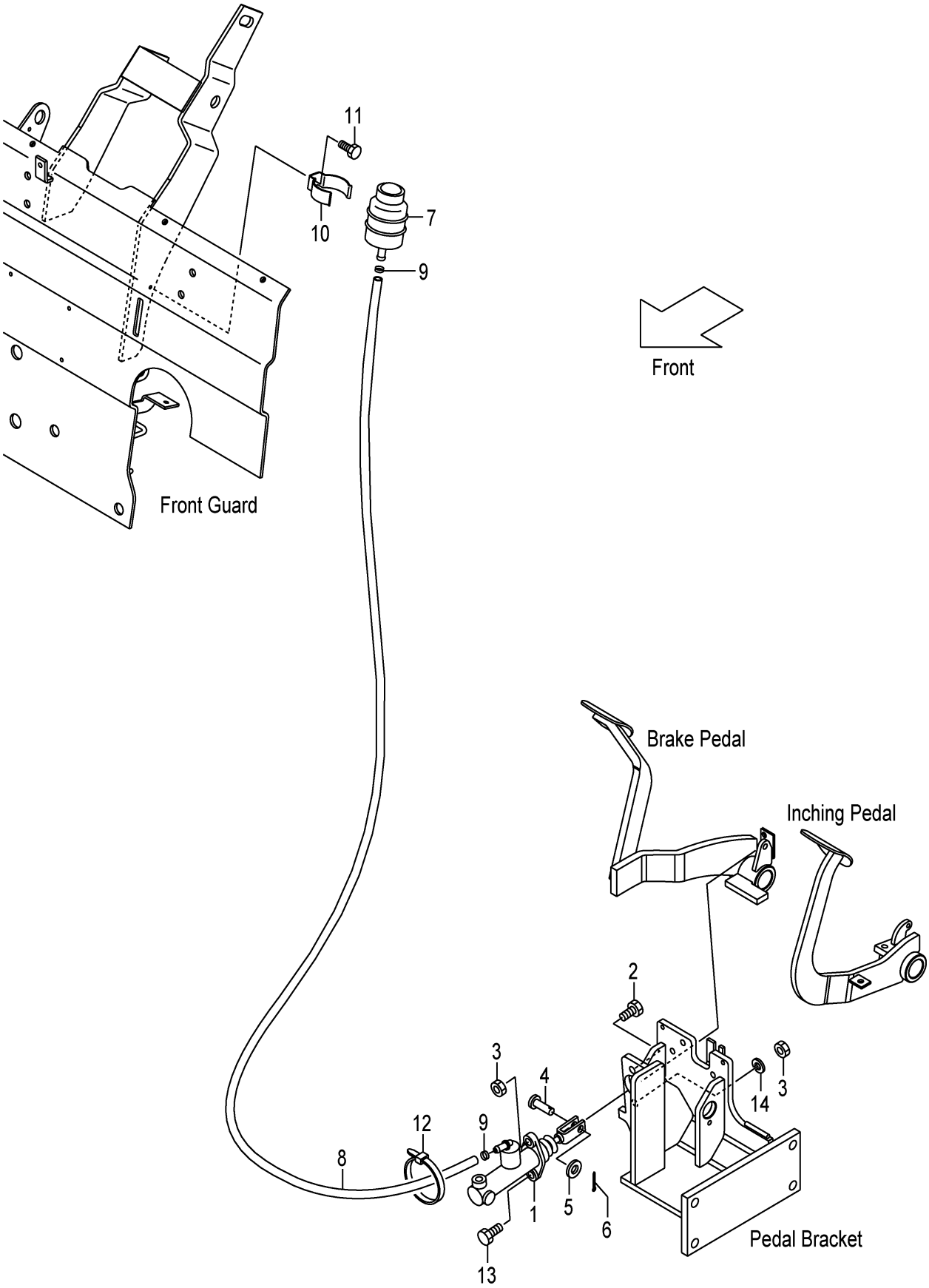

A:FD35T3S

Item No	Part No.	Mark	Description		Req'd	Remarks : Serial No.
1	27045-40302		CYL,BRAKE-MASTER	ｼﾘﾝﾀﾞ	1	SEE FIG.54
2	01184-10030		BOLT	ﾎﾞﾙﾄ	1	
3	01400-00010		NUT	ﾅｯﾄ	2	
4	02262-08025		PIN,CLEVIS	ﾋﾟﾝ	1	
5	02000-00008		WASHER	ﾜｯｼｬ	1	
6	02200-02020		PIN,COTTER	ﾋﾟﾝ	1	
7	23775-42101		TANK,RESERVE	ﾀﾝｸ	1	
8	22655-42591		HOSE,RESERVE	ﾎｰｽ	1	
9	25595-42491		BAND,HOSE	ﾊﾞﾝﾄﾞ	2	
10	224G5-42061		CLIP,RESERVE-TANK	ｸﾘｯﾌﾟ	1	
11	01183-06010		BOLT	ﾎﾞﾙﾄ	1	
12	04913-11100		BAND	ﾊﾞﾝﾄﾞ	1	
13	01100-10030		BOLT	ﾎﾞﾙﾄ	1	
14	02010-00010		WASHER	ﾜｯｼｬ	1	

FIG.52 BRAKE PIPE

(F7C354A0) ﾌﾞﾚｰｷﾊﾟｲﾌﾟ

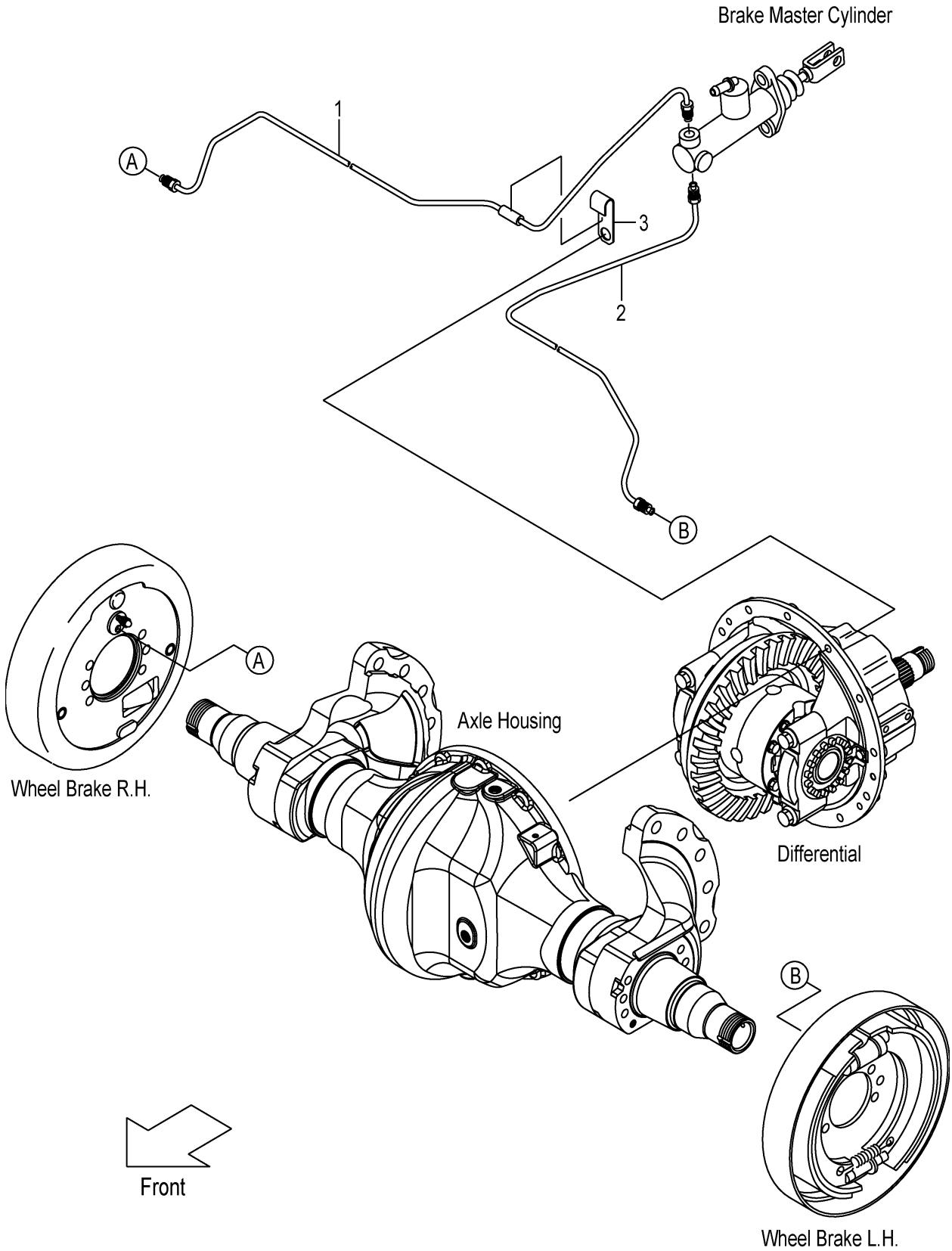

FIG.52
(F7C354A0)

A:FD35T3S

Item No	Part No.	Mark	Description	Req'd	Remarks : Serial No.
1	22Y55-42301		PIPE,BRAKE,RH ﾊﾟｲﾌﾟ	1	
2	22Y55-42401		PIPE,BRAKE,LH ﾊﾟｲﾌﾟ	1	
3	22N55-42171		CLIP,PIPE ｸﾘｯﾌﾟ	1	

FIG.53 FOOT PEDAL PARTS

(F7C354E0) ﾌｯﾄﾍﾟﾀﾞﾙﾊﾟｰﾂ

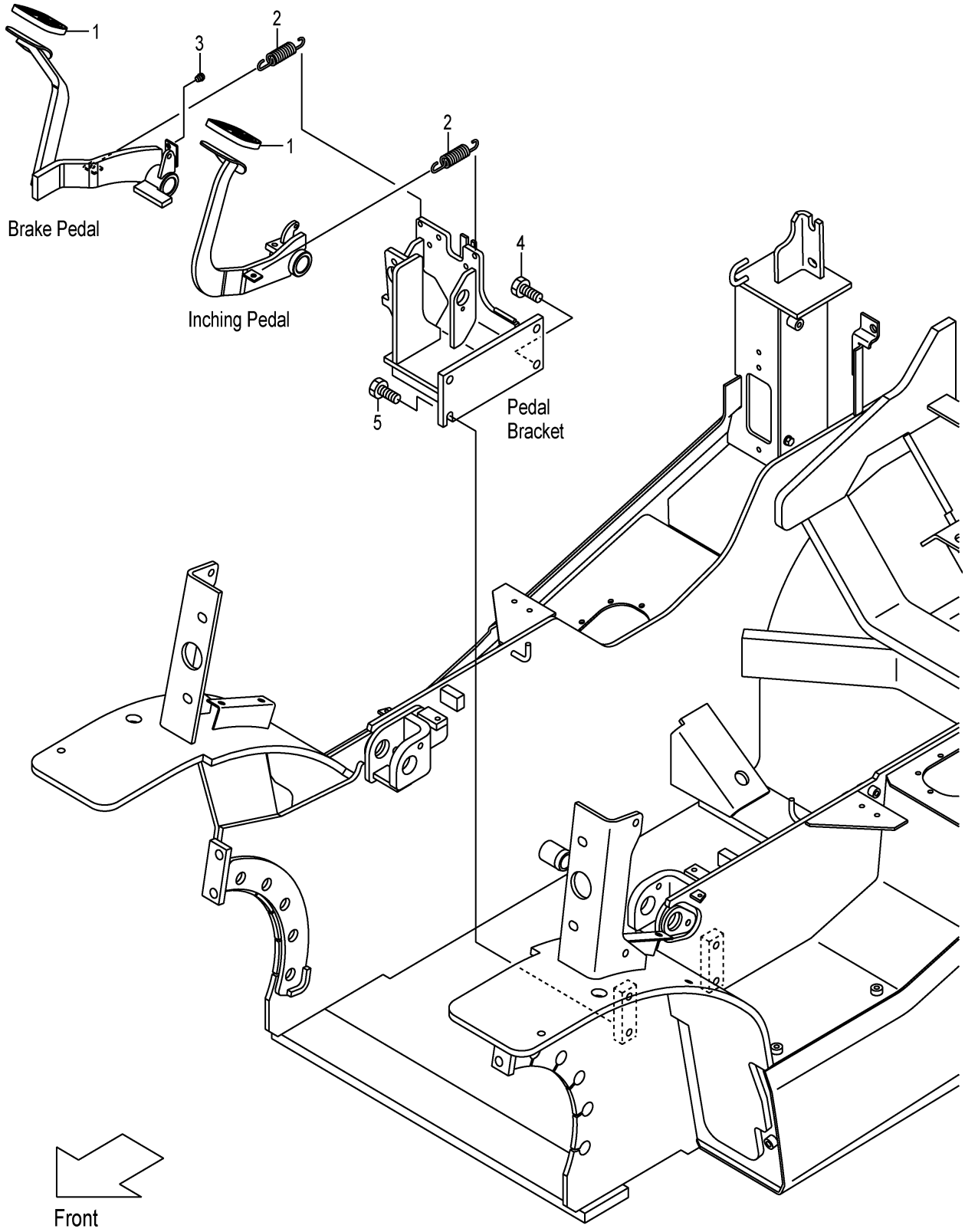

FIG.53
(F7C354E0)

A:FD35T3S

Item No	Part No.	Mark	Description		Req'd	Remarks : Serial No.
1	239A5-42301		COVER,HEAD	ｶﾊﾞｰ	2	
2	24235-42091		SPRING	ｽﾌﾟﾘﾝｸﾞ	2	
3	23235-40091		RUBBER	ﾗﾊﾞｰ	1	
4	01184-12030		BOLT	ﾎﾞﾙﾄ	3	
5	01186-12035		BOLT	ﾎﾞﾙﾄ	1	

FIG.54 BRAKE MASTER CYLINDER

(F7C354M0) ﾌﾞﾚｰｷﾏｽﾀｼﾘﾝﾀﾞ

KIT

K1 901

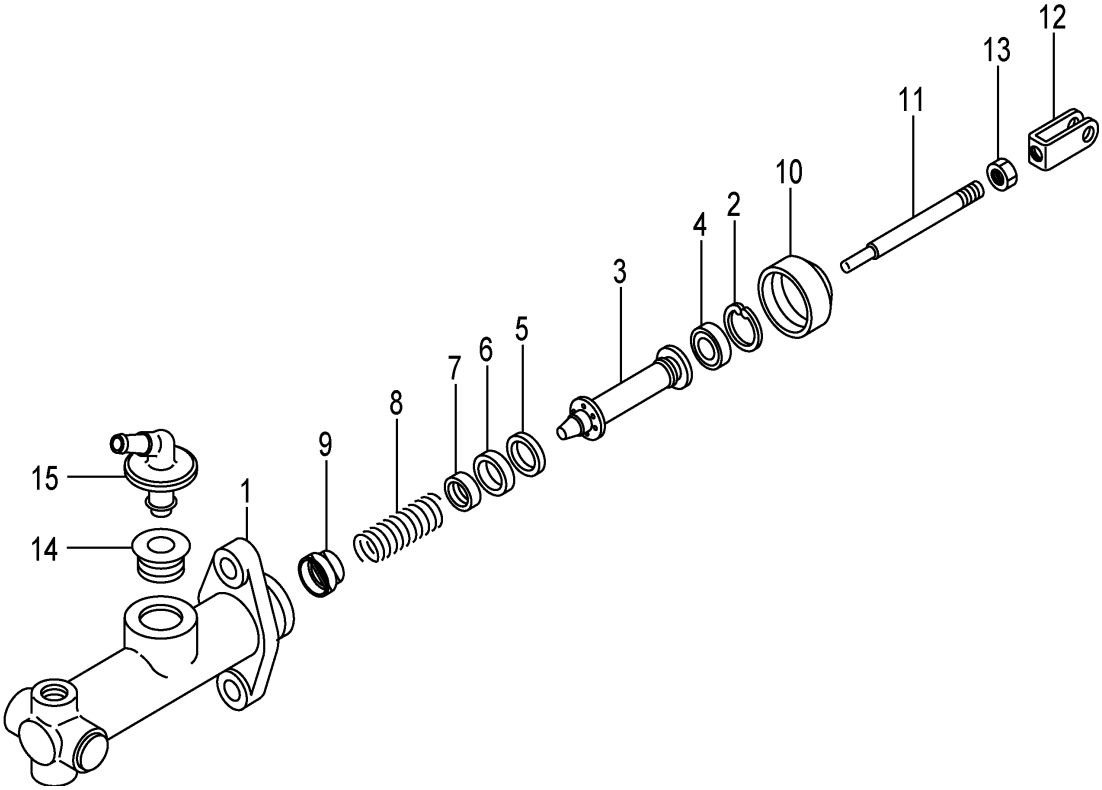

A:FD35T3S

Item No	Part No.	Mark	Description		Req'd	Remarks : Serial No.
A1	27045-40302		CYL-ASSY,BRAKE-MASTER	ﾌﾞﾚｰｷﾏｽﾀｼﾘﾝﾀﾞｱｯｾﾝ	1	INC.1-15
901	25595-42502	K1	KIT,REPAIR	ﾘﾍﾟｱｷｯﾄ	1	INC.2-10
1	NO PART NO.	#	BODY,CYL	ﾎﾞﾃﾞｨ	1	
2	NO PART NO.	#*	RING,SNAP	ﾘﾝｸﾞ	1	
3	NO PART NO.	#*	PISTON	ﾋﾟｽﾄﾝ	1	
4	NO PART NO.	#*	CAP,SECONDARY	ｷｬｯﾌﾟ	1	
5	NO PART NO.	#*	SPACER	ｽﾍﾟｰｻ	1	
6	NO PART NO.	#*	CAP,PRIMARY	ｷｬｯﾌﾟ	1	
7	NO PART NO.	#*	SEAT,SPRING	ｼｰﾄ	1	
8	NO PART NO.	#*	SPRING	ｽﾌﾟﾘﾝｸﾞ	1	
9	NO PART NO.	#*	VALVE	ﾊﾞﾙﾌﾞ	1	
10	NO PART NO.	#*	BOOT	ﾌﾞｰﾂ	1	
A2	25595-42482		ROD-ASSY,PUSH	ﾌﾟｯｼｭﾛｯﾄﾞｱｯｾﾝ	1	INC.11-13
11	NO PART NO.	#	ROD,PUSH	ﾛｯﾄﾞ	1	
12	25595-42452		CLEVIS	ｸﾚﾋﾞｽ	1	
13	01402-00008		NUT	ﾅｯﾄ	1	
14	25595-42421		BUSHING	ﾌﾞｯｼﾝｸﾞ	1	
15	25595-42411		UNION,FILLER	ﾕﾆｵﾝ	1	

FIG.55 BRAKE LEVER

(F7C35510) ﾌﾞﾚｰｷﾚﾊﾞｰ

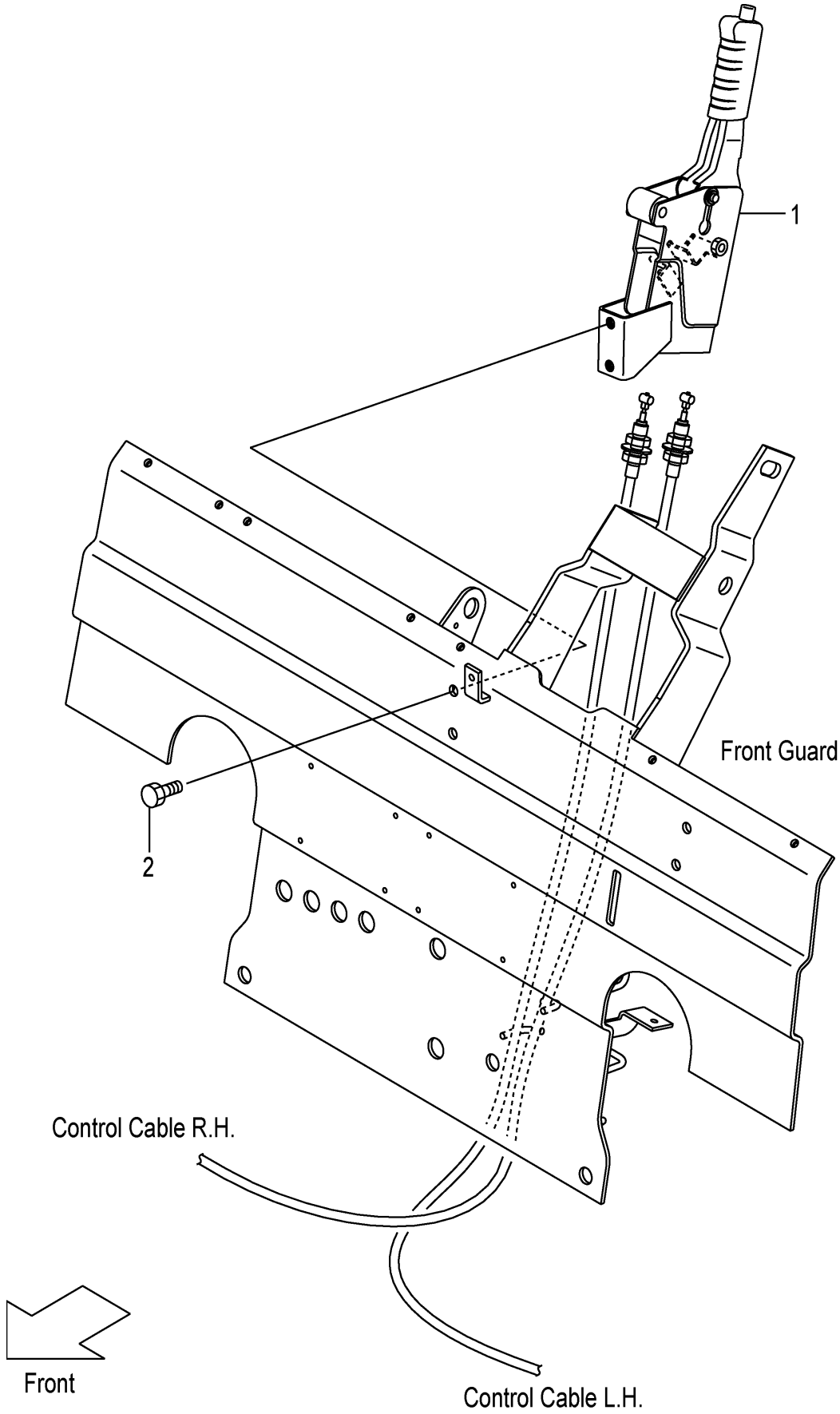

FIG.55

(F7C35510)

A:FD35T3S

Item No	Part No.	Mark	Description	Req'd	Remarks : Serial No.
1	22N55-50201		LEVER,PARKING-BRAKE レバー	1	
2	01184-10025		BOLT ボルト	2	

FIG.56 FRAME

(F7C36110) フレーム

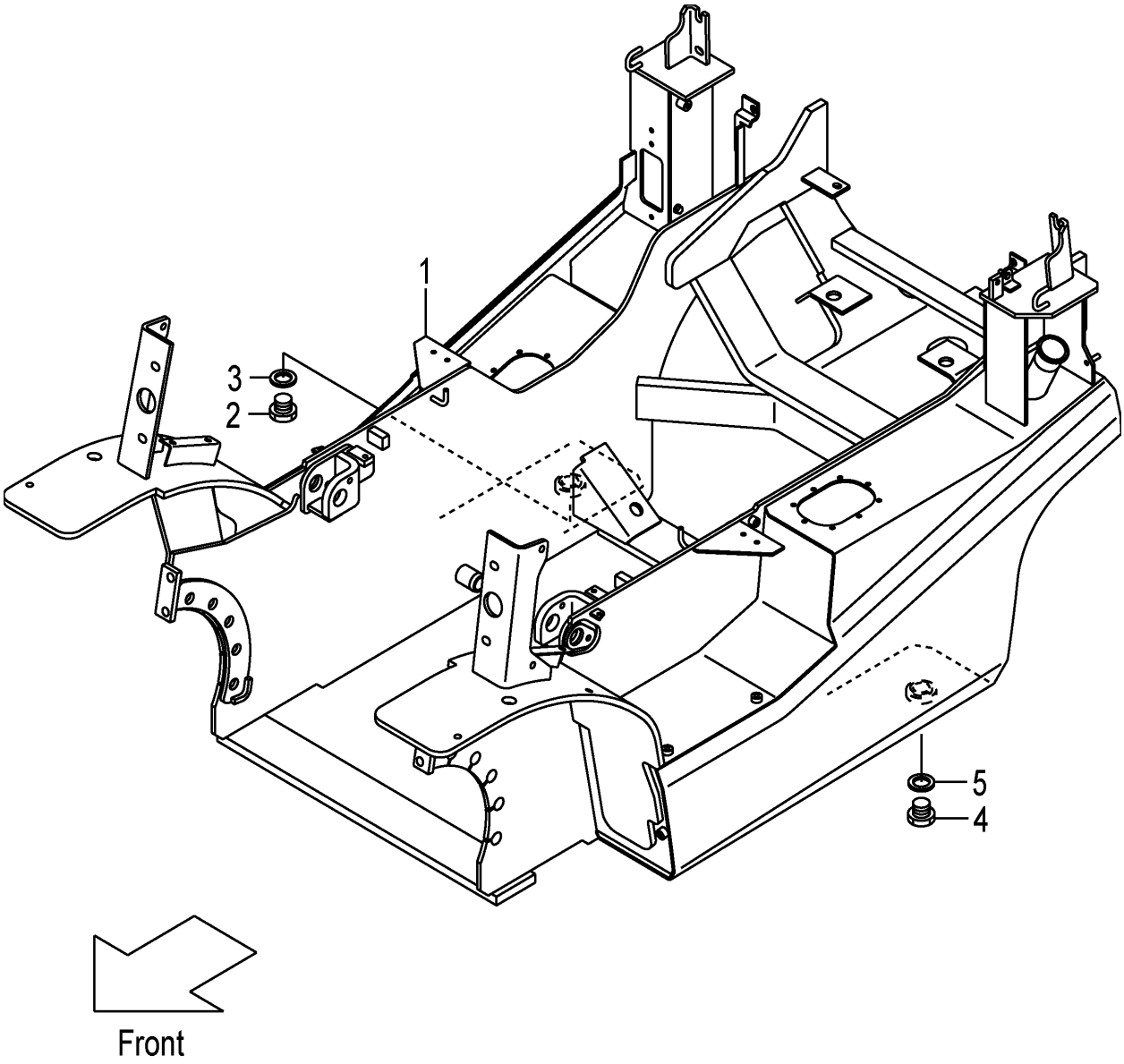

FIG.56
(F7C36110)

A:FD35T3S

Item No	Part No.	Mark	Description		Req'd	Remarks : Serial No.
1	NO PART NO.	#	FRAME	ﾌﾚｰﾑ	1	
2	21237-52051		PLUG,DRAIN	ﾌﾟﾗｸﾞ	1	
3	21237-52062		PACKING	ﾊﾟｯｷﾝｸﾞ	1	
4	21237-52051		PLUG,DRAIN	ﾌﾟﾗｸﾞ	1	
5	21237-52062		PACKING	ﾊﾟｯｷﾝｸﾞ	1	

FIG.57 OIL TANK

(F7C36120) オイルタンク

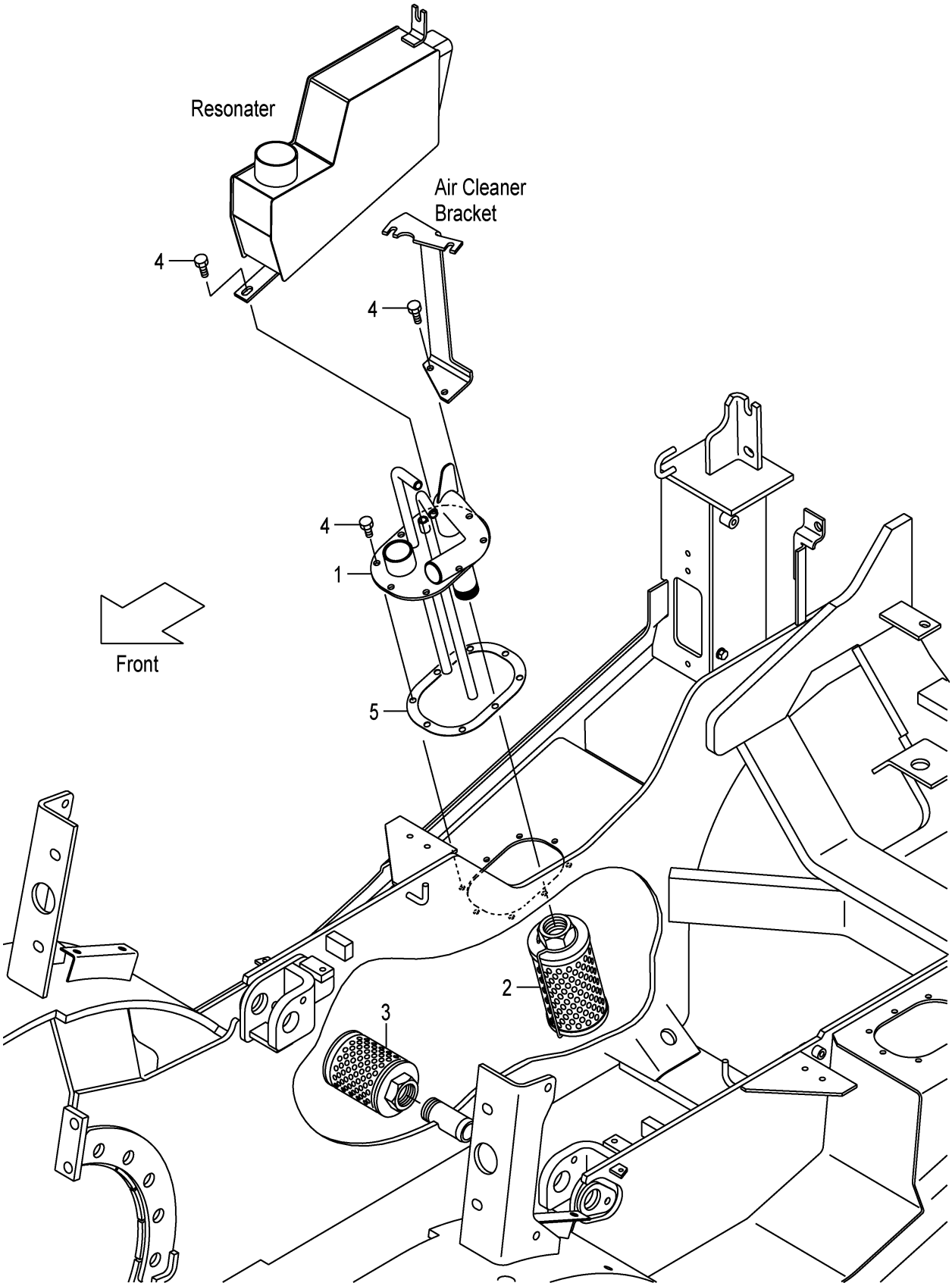

FIG.57

(F7C36120)

A:FD35T3S

Item No	Part No.	Mark	Description		Req'd	Remarks : Serial No.
1	22N57-52303		PIPE,RETURN	ﾊﾟｲﾌﾟ	1	
2	271A7-52301		FILTER,RETURN	ﾌｨﾙﾀ	1	
3	22N57-53001		FILTER,SUCTION	ﾌｨﾙﾀ	1	
4	229F2-22151		BOLT	ﾎﾞﾙﾄ	8	
5	22N52-22201		PACKING	ﾊﾟｯｷﾝｸﾞ	1	

FIG.58 OIL CAP & LEVEL

(F7C36130) オイルキャップ&レベル

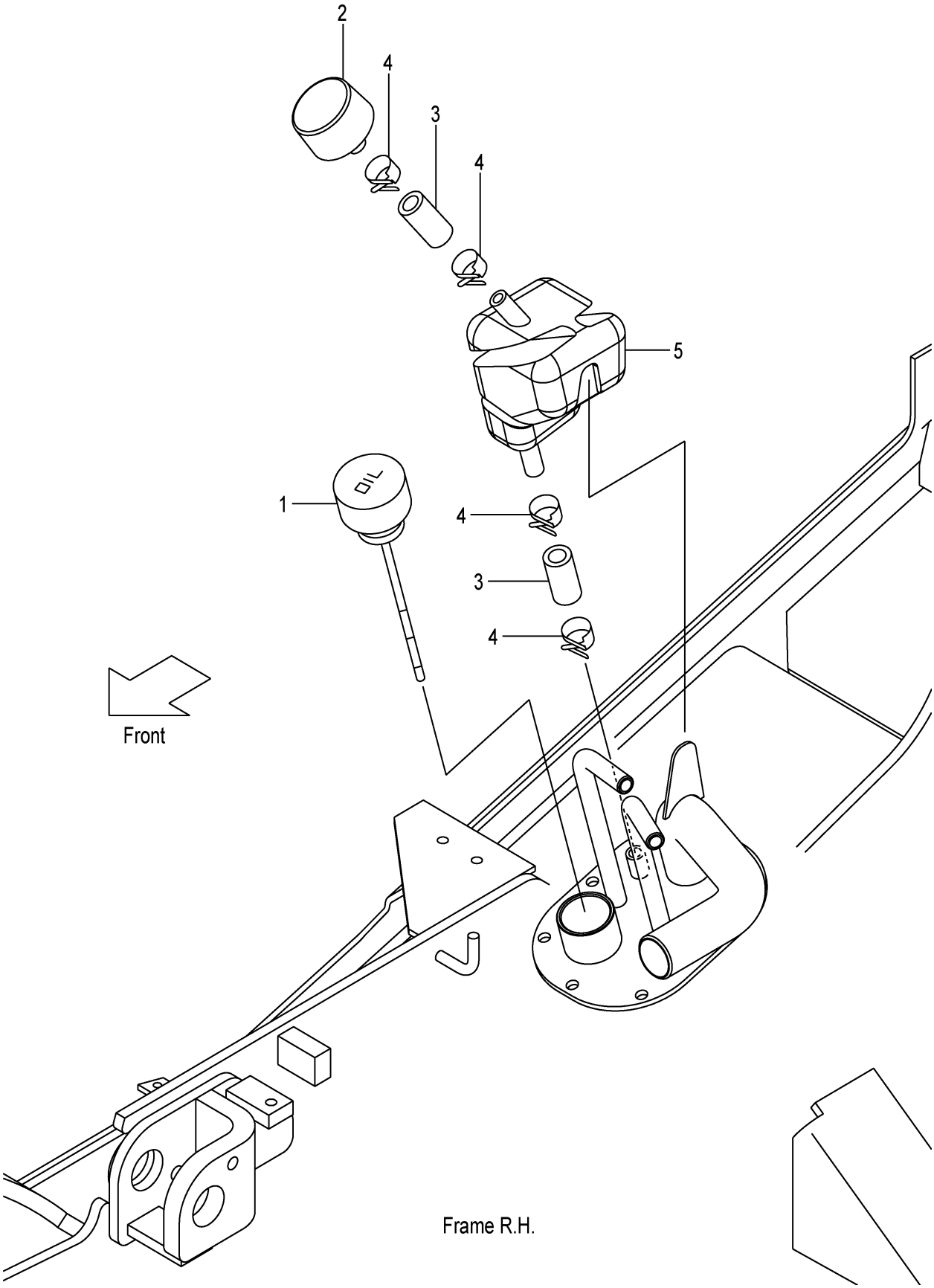

FIG.58

(F7C36130)

A:FD35T3S

Item No	Part No.	Mark	Description		Req'd	Remarks : Serial No.
1	22Y57-52101		CAP,OIL	ｷｬｯﾌﾟ	1	
2	216G7-52201		CAP,BREATHER	ｷｬｯﾌﾟ	1	
3	04710-04004		HOSE	ﾎｰｽ	2	
4	04914-00019		CLIP	ｸﾘｯﾌﾟ	4	
5	22N57-53101		TANK,SUB	ﾀﾝｸ	1	

FIG.59 FUEL TANK

(F7C36150) フューエルタンク

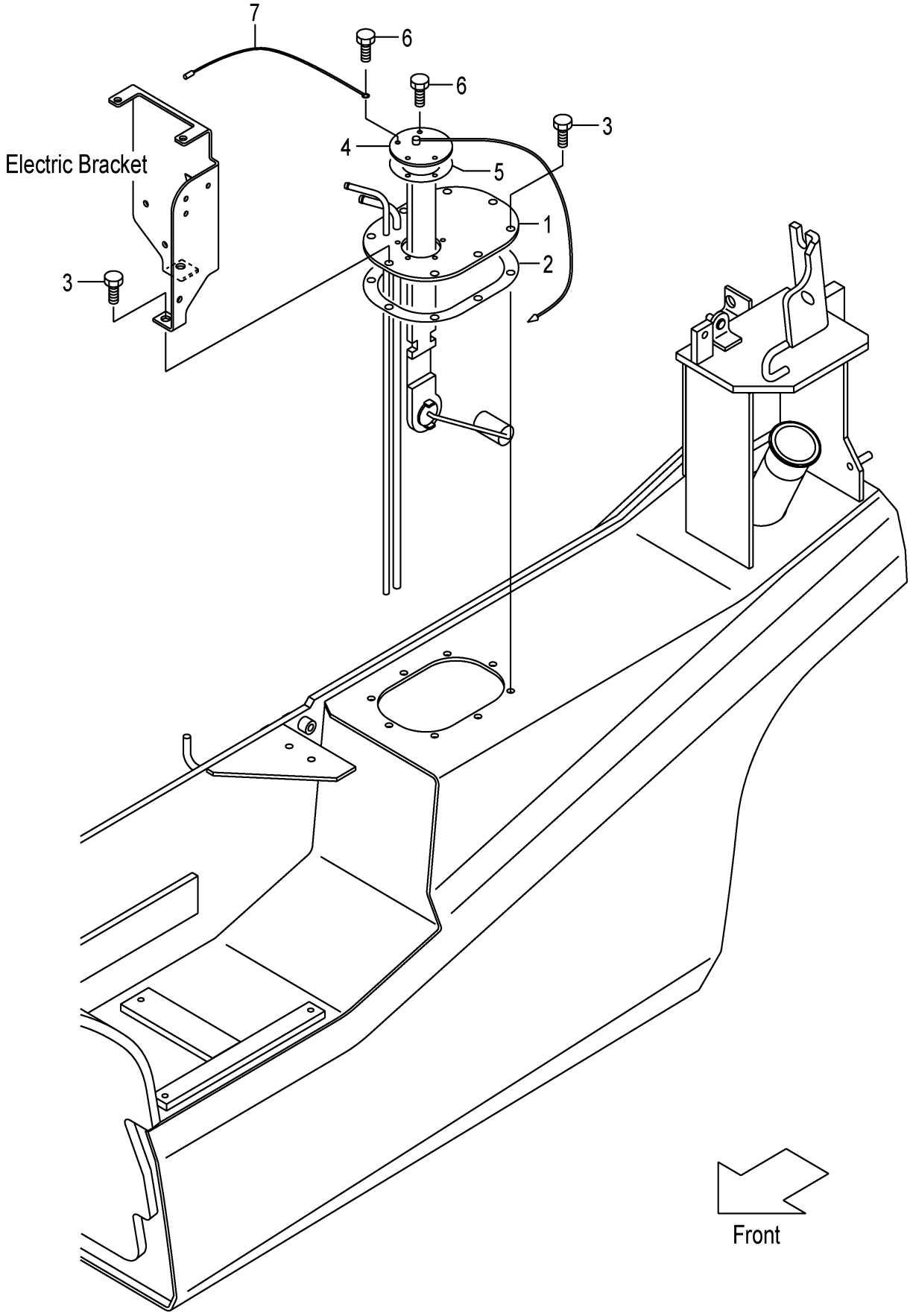

FIG.59

(F7C36150)

A:FD35T3S

Item No	Part No.	Mark	Description		Req'd	Remarks : Serial No.
1	22N52-22101		PLATE,FUEL-TOP	ﾌﾟﾚｰﾄ	1	
2	22N52-22201		PACKING	ﾊﾟｯｷﾝｸﾞ	1	
3	229F2-22151		BOLT	ﾎﾞﾙﾄ	8	
4	222A2-22061		GAUGE,FUEL	ｹﾞｰｼﾞ	1	
5	229F2-22071		GASKET	ｶﾞｽｹｯﾄ	1	
6	229F2-22171		BOLT	ﾎﾞﾙﾄ	5	
7	25592-42121		WIRE	ﾜｲﾔ	1	

FIG.60 BALANCE WEIGHT

(F7C36310) ﾊﾞﾗﾝｽｳｴｲﾄ

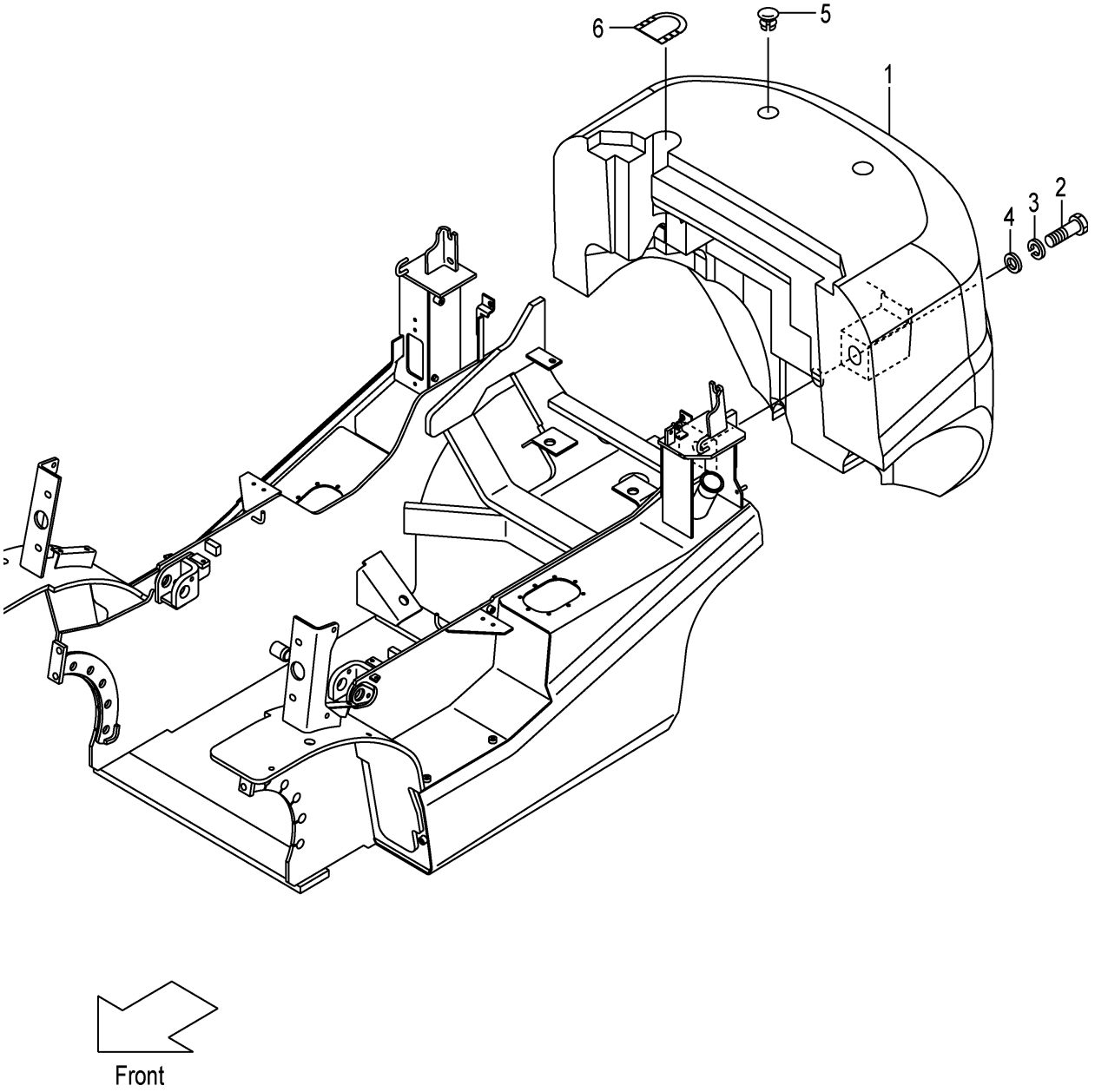

FIG.60

(F7C36310)

A:FD35T3S

Item No	Part No.	Mark	Description		Req'd	Remarks : Serial No.
1	NO PART NO.	#	WEIGHT,BALANCE,3.5	ｳｴｲﾄ	1	
2	01110-36200		BOLT	ﾎﾞﾙﾄ	1	
3	02010-00036		WASHER	ﾜｯｼｬ	1	
4	25786-32031		WASHER	ﾜｯｼｬ	1	
5	22N56-32041		CAP	ｷｬｯﾌﾟ	2	
6	22N56-32301		COVER	ｶﾊﾞｰ	1	

FIG.61 FRONT GUARD

(F7C36410) フロントガード

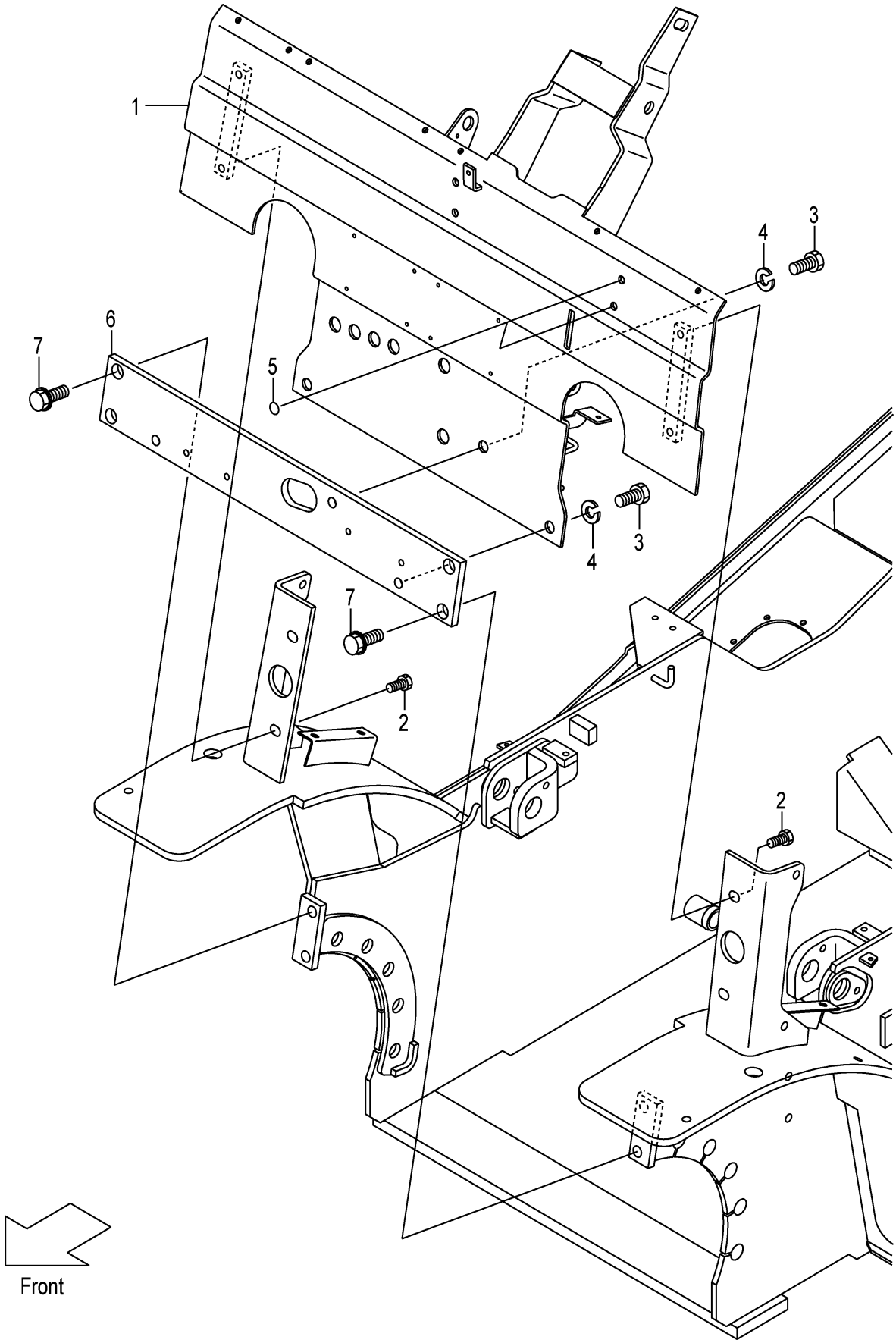

FIG.61

(F7C36410)

A:FD35T3S

Item No	Part No.	Mark	Description		Req'd	Remarks : Serial No.
1	22N56-40102		GUARD,FRONT	ｶﾞｰﾄﾞ	1	
2	01186-12025		BOLT	ﾎﾞﾙﾄ	4	
3	01100-16020		BOLT	ﾎﾞﾙﾄ	3	
4	02010-00016		WASHER	ﾜｯｼｬ	3	
5	22N55-13181		SEAL,PANEL-COVER	ｼｰﾙ	2	
6	22N56-42041		PLATE,FRONT	ﾌﾟﾚｰﾄ	1	
7	216G6-43561		BOLT,FLANGE	ﾎﾞﾙﾄ	4	

FIG.62 BONNET

(F7C36420) ﾎﾞﾝﾈｯﾄ

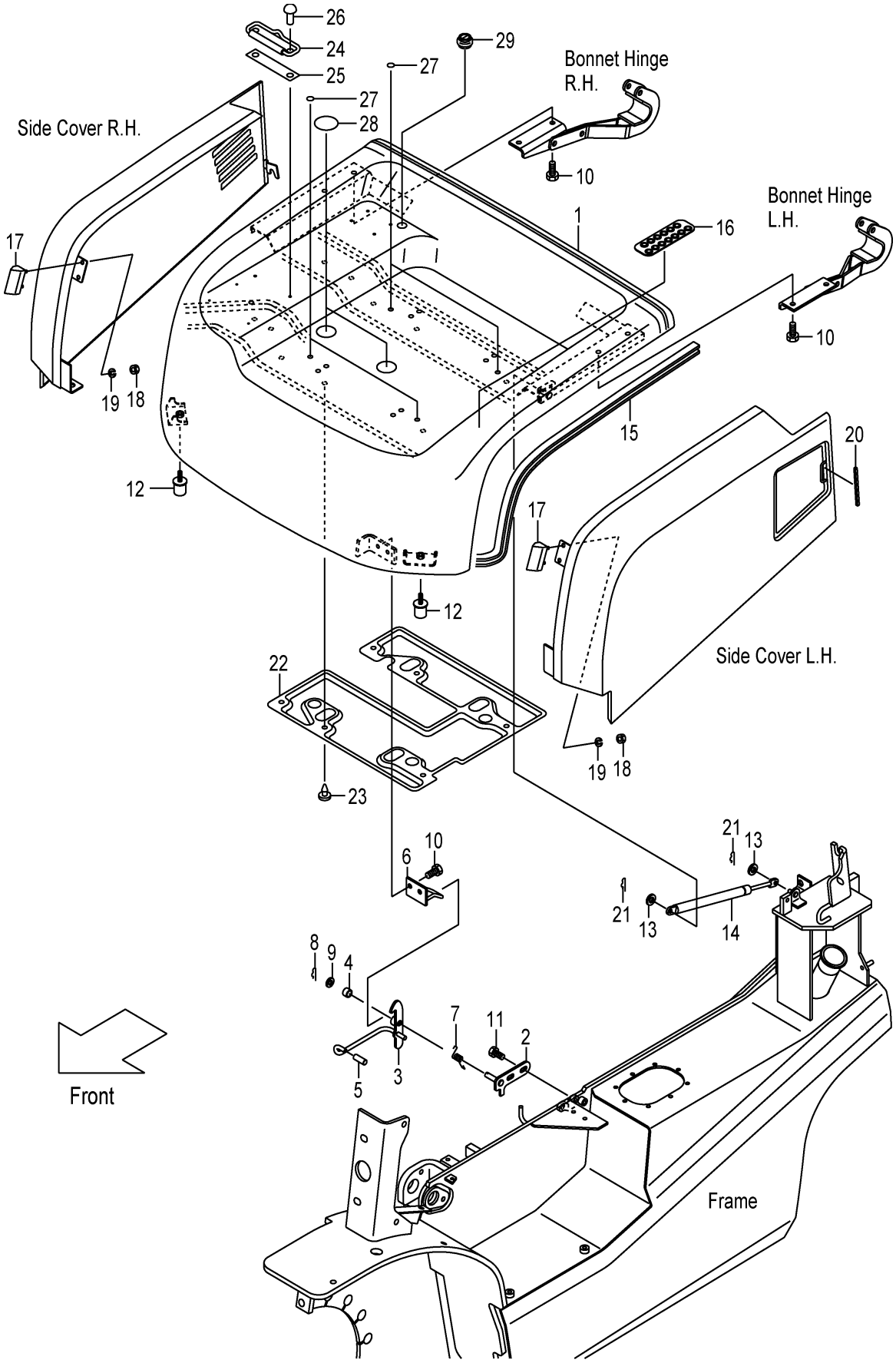

FIG.62
(F7C36420)

A:FD35T3S

Item No	Part No.	Mark	Description		Req'd	Remarks : Serial No.
1	22N56-40203		BONNET	ﾎﾞﾝﾈｯﾄ	1	
A1	243C6-40021		CATCH-ASSY,BONNET	ﾎﾞﾝﾈｯﾄｷｬｯﾁｱｯｾﾝ	1	INC.2-9
2	NO PART NO.	#	BRACKET,BONNET-CATCH	ﾌﾞﾗｹｯﾄ	1	
3	NO PART NO.	#	LATCH	ﾗｯﾁ	1	
4	23655-22101		BUSHING	ﾌﾞｯｼﾝｸﾞ	1	
5	216G6-52291		CAP	ｷｬｯﾌﾟ	1	
6	216G6-42451		HOOK	ﾌｯｸ	1	
7	216G6-42481		SPRING	ｽﾌﾟﾘﾝｸﾞ	1	
8	216H5-42141		PIN,SNAP	ﾋﾟﾝ	1	
9	02000-00010		WASHER	ﾜｯｼｬ	1	
10	01183-08016		BOLT	ﾎﾞﾙﾄ	6	
11	01185-08016		BOLT	ﾎﾞﾙﾄ	2	
12	22N56-43051		RUBBER,STOPPER	ﾗﾊﾞｰ	2	
13	02000-00008		WASHER	ﾜｯｼｬ	2	
14	22N56-43041		SPRING,GAS	ｽﾌﾟﾘﾝｸﾞ	1	
15	22N56-40361		RUBBER,SEAL,BONNET	ﾗﾊﾞｰ	1	
16	22N56-43221		RUBBER	ﾗﾊﾞｰ	1	
17	22N56-43281		STOPPER,BONNET	ｽﾄｯﾊﾟ	2	
18	01400-00006		NUT	ﾅｯﾄ	4	
19	02010-00006		WASHER	ﾜｯｼｬ	4	
20	22N56-43271		RUBBER	ﾗﾊﾞｰ	1	
21	216H3-92171		PIN,SNAP	ﾋﾟﾝ	2	
22	22N56-40471		INSULATOR,C	ｲﾝｼｭﾚｰﾀ	1	
23	216G6-42541		CLIP	ｸﾘｯﾌﾟ	6	
24	25599-32001		BINDER	ﾊﾞｲﾝﾀﾞ	1	
25	25599-32021		SHEET,BINDER	ｼｰﾄ	1	
26	22256-42001		RIVET	ﾘﾍﾞｯﾄ	2	
27	22N56-43531		SEAL,PANEL-COVER	ｼｰﾙ	6	
28	22N56-43541		SEAT,BONNET	ｼｰﾄ	2	
29	27662-62711		GROMMET	ｸﾞﾛﾒｯﾄ	1	

FIG.63 RADIATOR COVER

(F7C36430) ﾗｼﾞｴｰﾀｶﾊﾞｰ

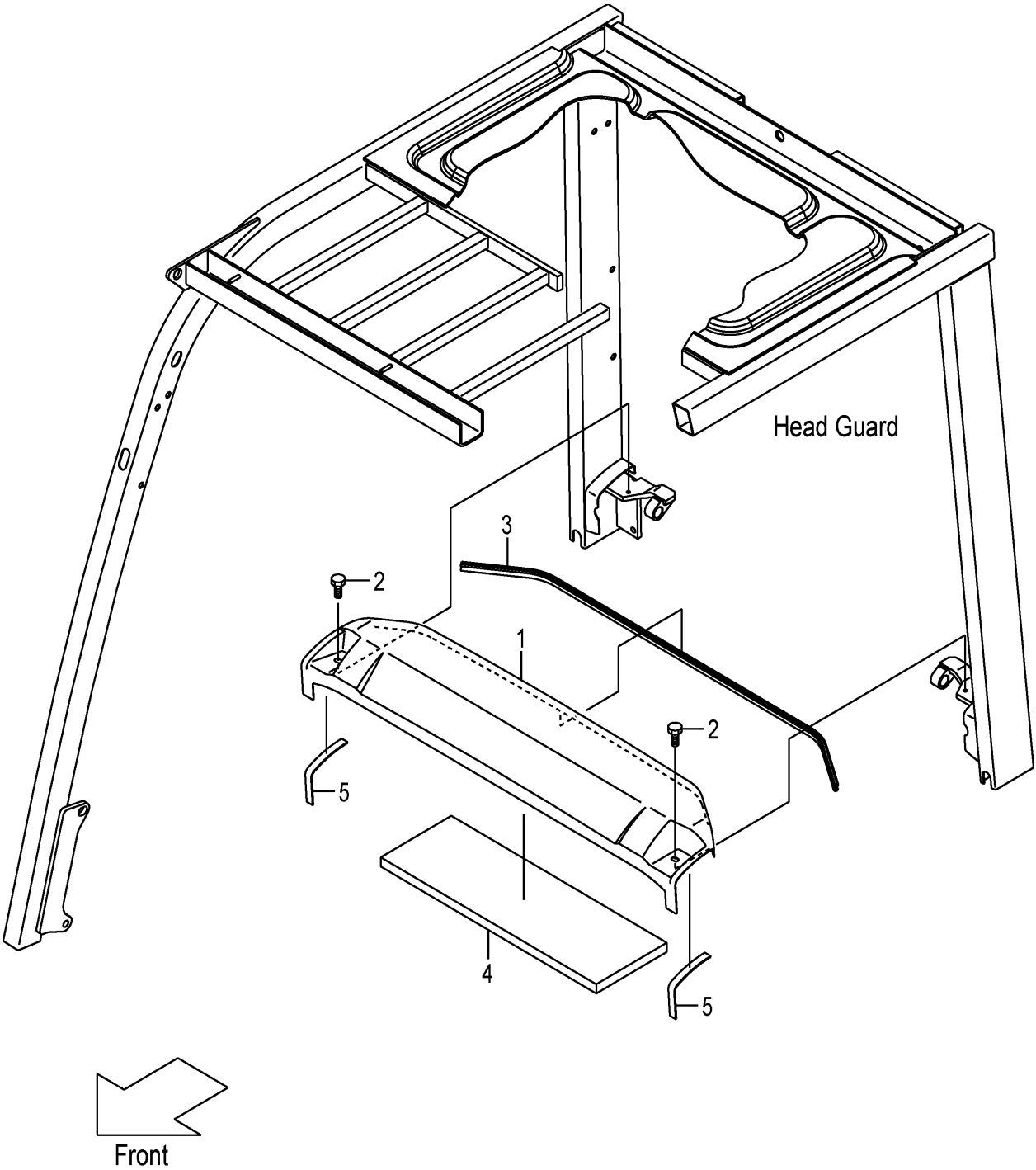

FIG.63

(F7C36430)

A:FD35T3S

Item No	Part No.	Mark	Description		Req'd	Remarks : Serial No.
1	22N56-40302		COVER,RADIATOR	ｶﾊﾞｰ	1	
2	01181-08016		BOLT	ﾎﾞﾙﾄ	2	
3	22N56-40371		SEAL,RUBBER	ｼｰﾙ	1	
4	22N56-40401		RUBBER,RAD-COVER	ﾗﾊﾞｰ	1	
5	234A6-43121		RUBBER	ﾗﾊﾞｰ	2	

FIG.64 BONNET HINGE

(F7C36440) ﾎﾞﾝﾈｯﾄﾋﾝｼﾞ

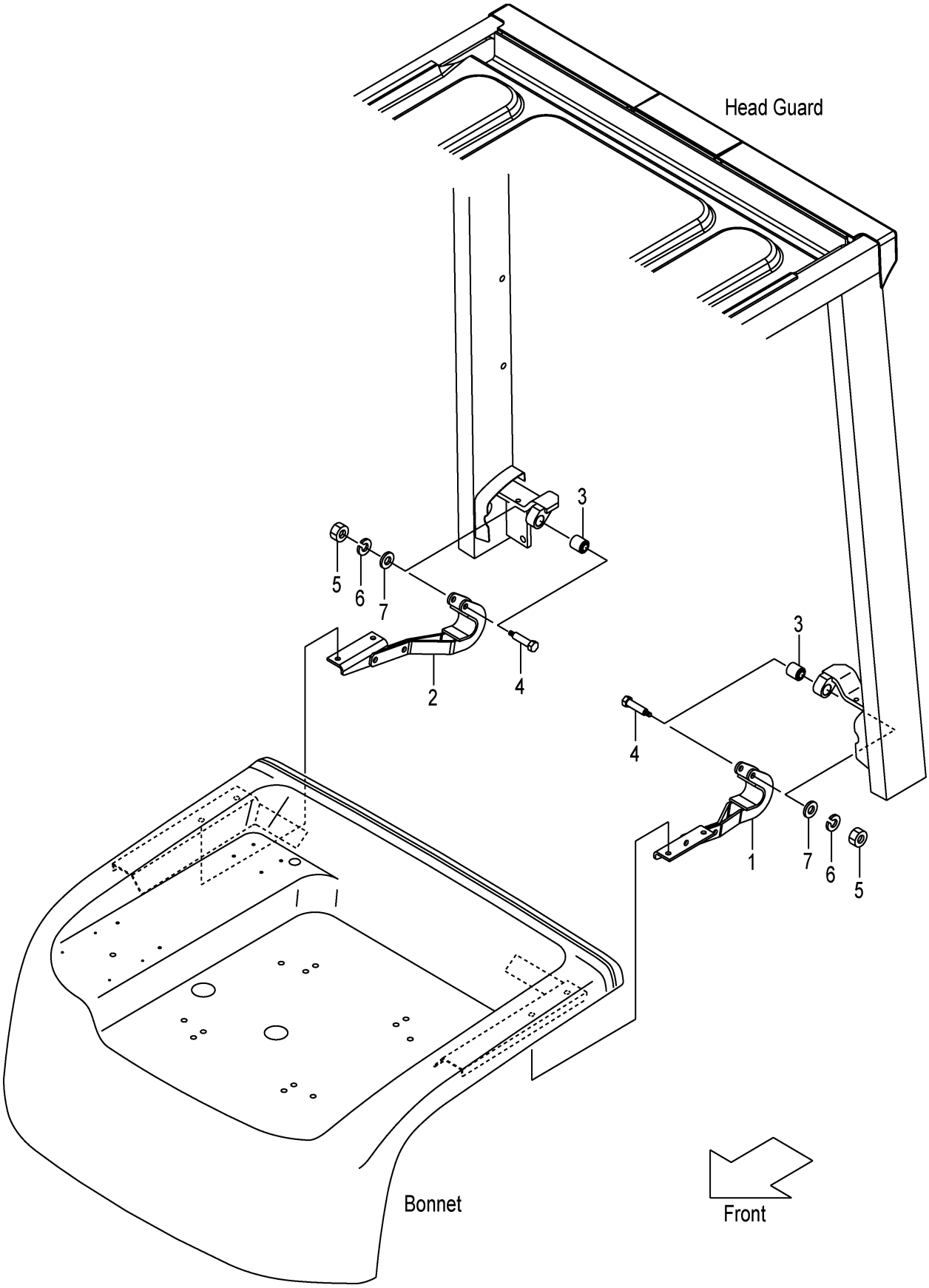

FIG.64

(F7C36440)

A:FD35T3S

Item No	Part No.	Mark	Description		Req'd	Remarks : Serial No.
1	22N56-42602		HINGE,LH	ﾋﾝｼﾞ	1	
2	22N56-42612		HINGE,RH	ﾋﾝｼﾞ	1	
3	216G6-42921		BUSHING	ﾌﾞｯｼﾝｸﾞ	2	
4	216G6-42931		BOLT	ﾎﾞﾙﾄ	2	
5	01400-00006		NUT	ﾅｯﾄ	2	
6	02010-00006		WASHER	ﾜｯｼｬ	2	
7	02000-00006		WASHER	ﾜｯｼｬ	2	

FIG.65 FLOOR BOARD

(F7C36450) フロアボード

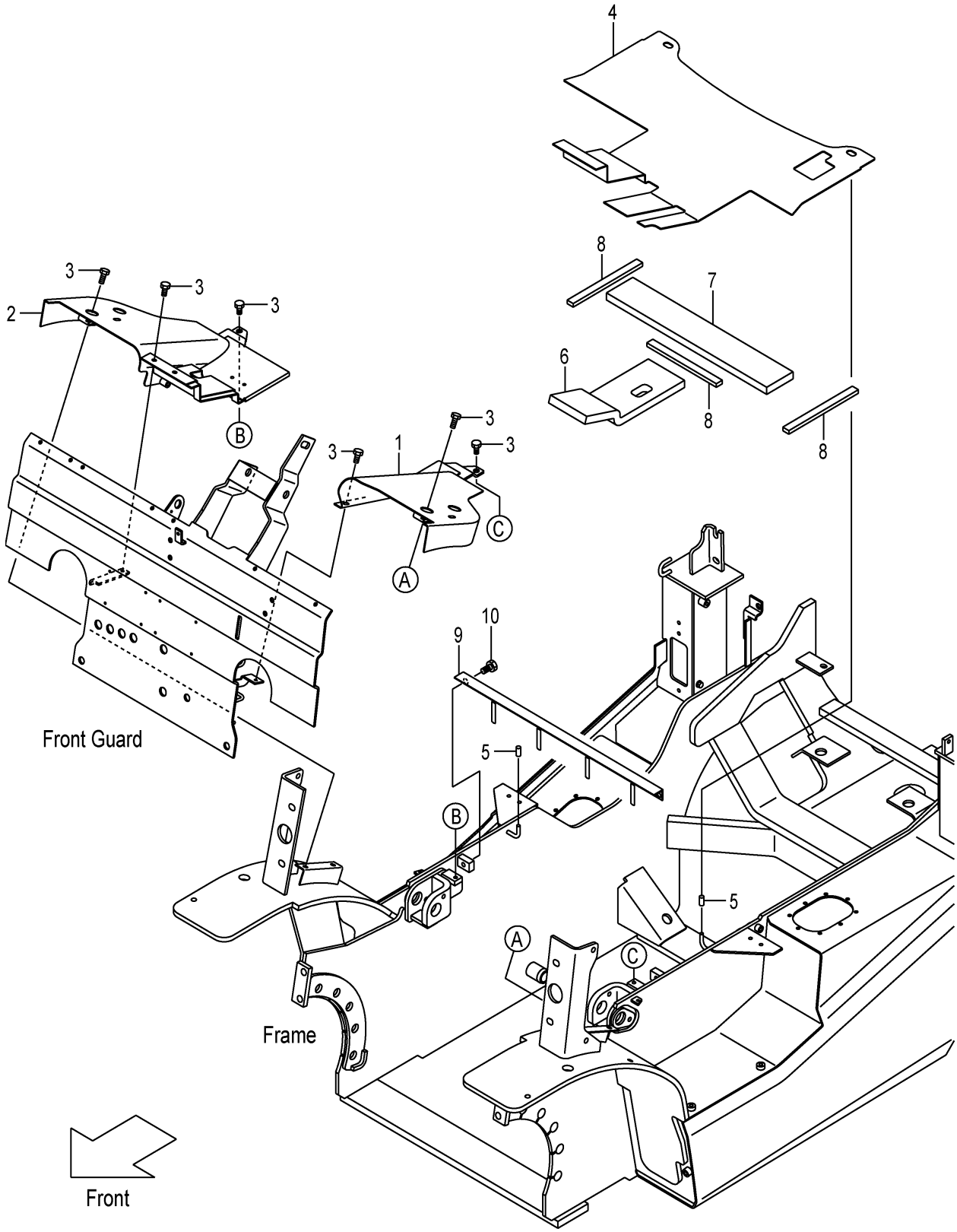

A:FD35T3S

Item No	Part No.	Mark	Description		Req'd	Remarks : Serial No.
1	22N56-50201		COVER,LH	ｶﾊﾞｰ	1	
2	22N56-50212		COVER,RH	ｶﾊﾞｰ	1	
3	01185-08016		BOLT	ﾎﾞﾙﾄ	6	
4	22N56-52201		BOARD,FLOOR	ﾎﾞｰﾄﾞ	1	
5	216G6-52291		CAP	ｷｬｯﾌﾟ	2	
6	22N56-52222		RUBBER,FLOOR-BOARD	ﾗﾊﾞｰ	1	
7	22N56-52231		RUBBER,FLOOR-BOARD	ﾗﾊﾞｰ	1	
8	216G6-52161		RUBBER	ﾗﾊﾞｰ	3	
9	22N56-52402		ANGLE	ｱﾝｸﾞﾙ	1	
10	01185-10016		BOLT	ﾎﾞﾙﾄ	2	

FIG.66 STEP & FLOOR MAT

(F7C36460) ｽﾃｯﾌﾟ&ﾌﾛｱﾏｯﾄ

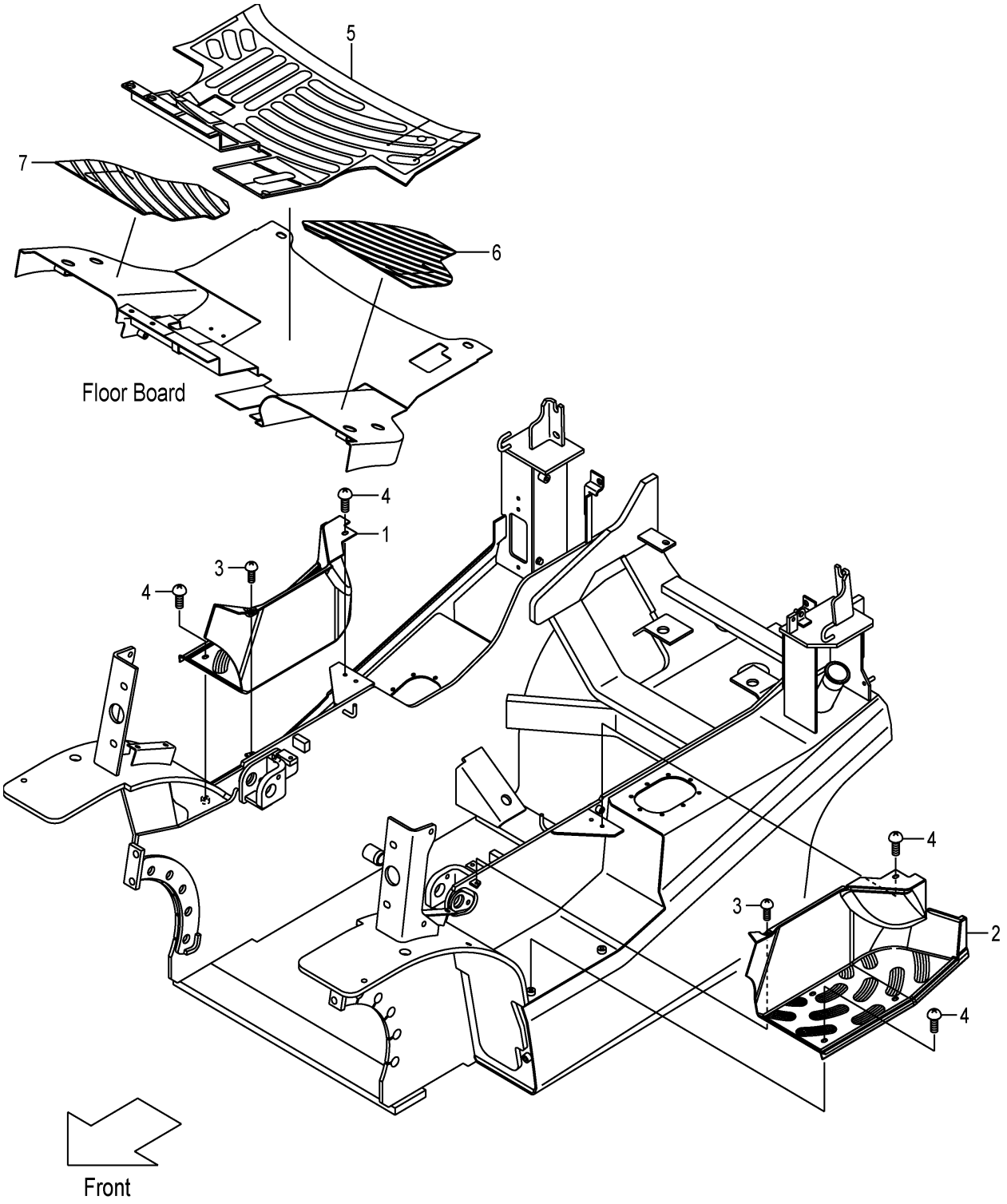

FIG.66

(F7C36460)

A:FD35T3S

Item No	Part No.	Mark	Description		Req'd	Remarks : Serial No.
1	22N56-42901		COVER,STEP,RH	ｶﾊﾞｰ	1	
2	22N56-42911		COVER,STEP,LH	ｶﾊﾞｰ	1	
3	214A6-42771		SCREW	ｽｸﾘｭ	2	
4	278M6-42031		SCREW	ｽｸﾘｭ	6	
5	22N56-52302		MAT,FLOOR	ﾏｯﾄ	1	
6	22N56-52311		MAT,FLOOR,LH	ﾏｯﾄ	1	
7	22N56-52321		MAT,FLOOR,RH	ﾏｯﾄ	1	

FIG.67 FRONT COVER

(F7C36480) フロントカバー

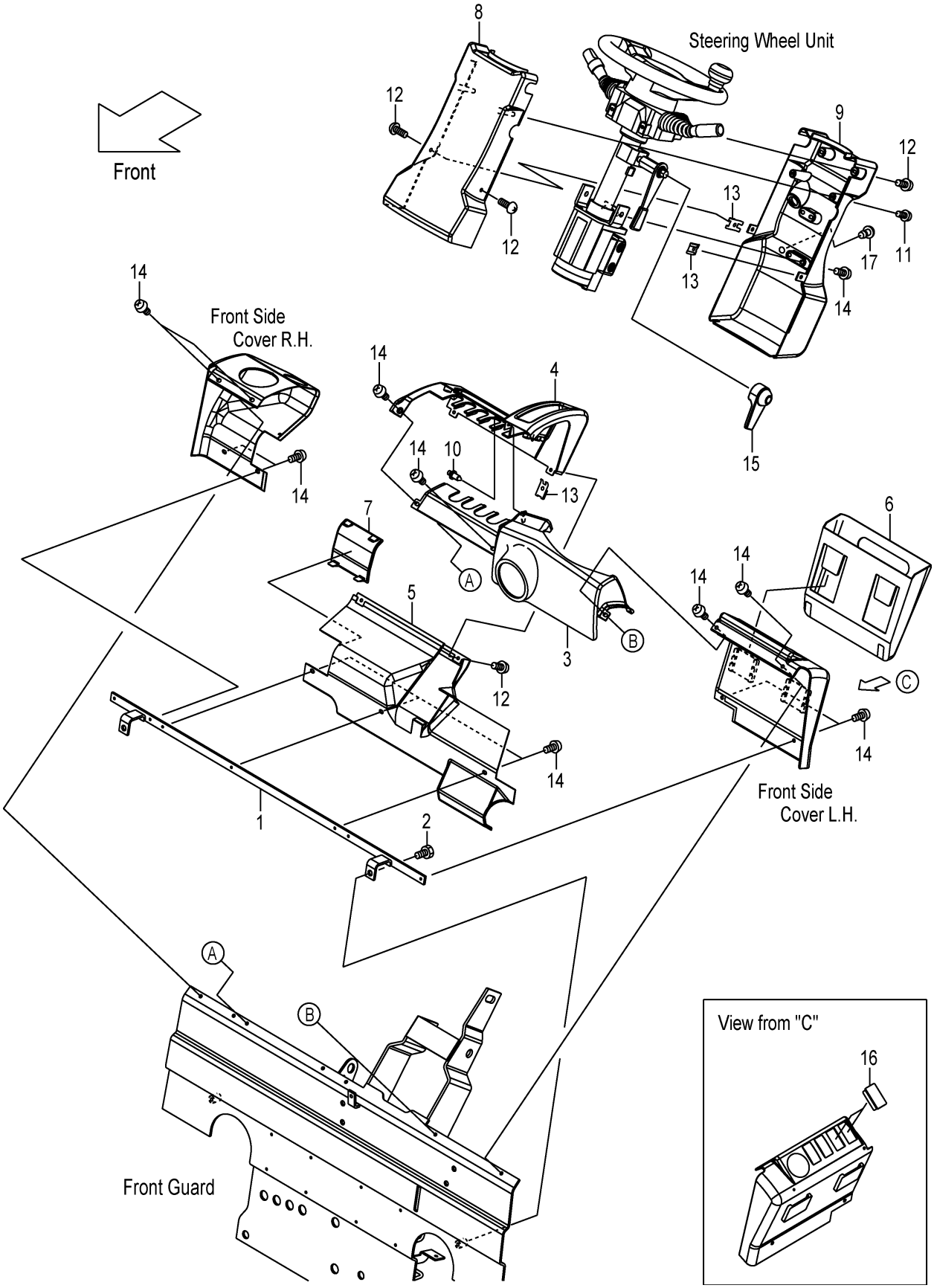

FIG.67

(F7C36480)

A:FD35T3S

Item No	Part No.	Mark	Description		Req'd	Remarks : Serial No.
1	22N56-42861		BRACKET,COVER	ﾌﾞﾗｹｯﾄ	1	
2	01185-08016		BOLT	ﾎﾞﾙﾄ	2	
3	22N56-42741		COVER,FRONT	ｶﾊﾞｰ	1	
4	22N56-42701		COVER,METER-PANEL	ｶﾊﾞｰ	1	
5	22N56-42731		COVER,LOWER	ｶﾊﾞｰ	1	
6	22N56-42751		POCKET,BINDER	ﾎﾟｹｯﾄ	1	
7	22N56-42771		COVER,CHANGE-LEVER	ｶﾊﾞｰ	1	
8	22N54-12321		COVER,HANDLE,FRONT	ｶﾊﾞｰ	1	
9	22N54-12311		COVER,HANDLE,REAR	ｶﾊﾞｰ	1	
10	22N56-42791		RIVET,PUSH	ﾘﾍﾞｯﾄ	1	
11	222A2-42031		SCREW	ｽｸﾘｭ	2	
12	209K2-43001		SCREW	ｽｸﾘｭ	6	
13	281E6-42521		NUT,SPEED	ﾅｯﾄ	4	
14	225R6-42031		SCREW	ｽｸﾘｭ	15	
15	22N54-12201		COVER,TILT-LOCK	ｶﾊﾞｰ	1	
16	256T2-42121		CAP	ｷｬｯﾌﾟ	2	
17	281E6-42571		PLUG,HOLE	ﾌﾟﾗｸﾞ	1	

FIG.68 SIDE COVER

(F7C364A0) サイドカバー

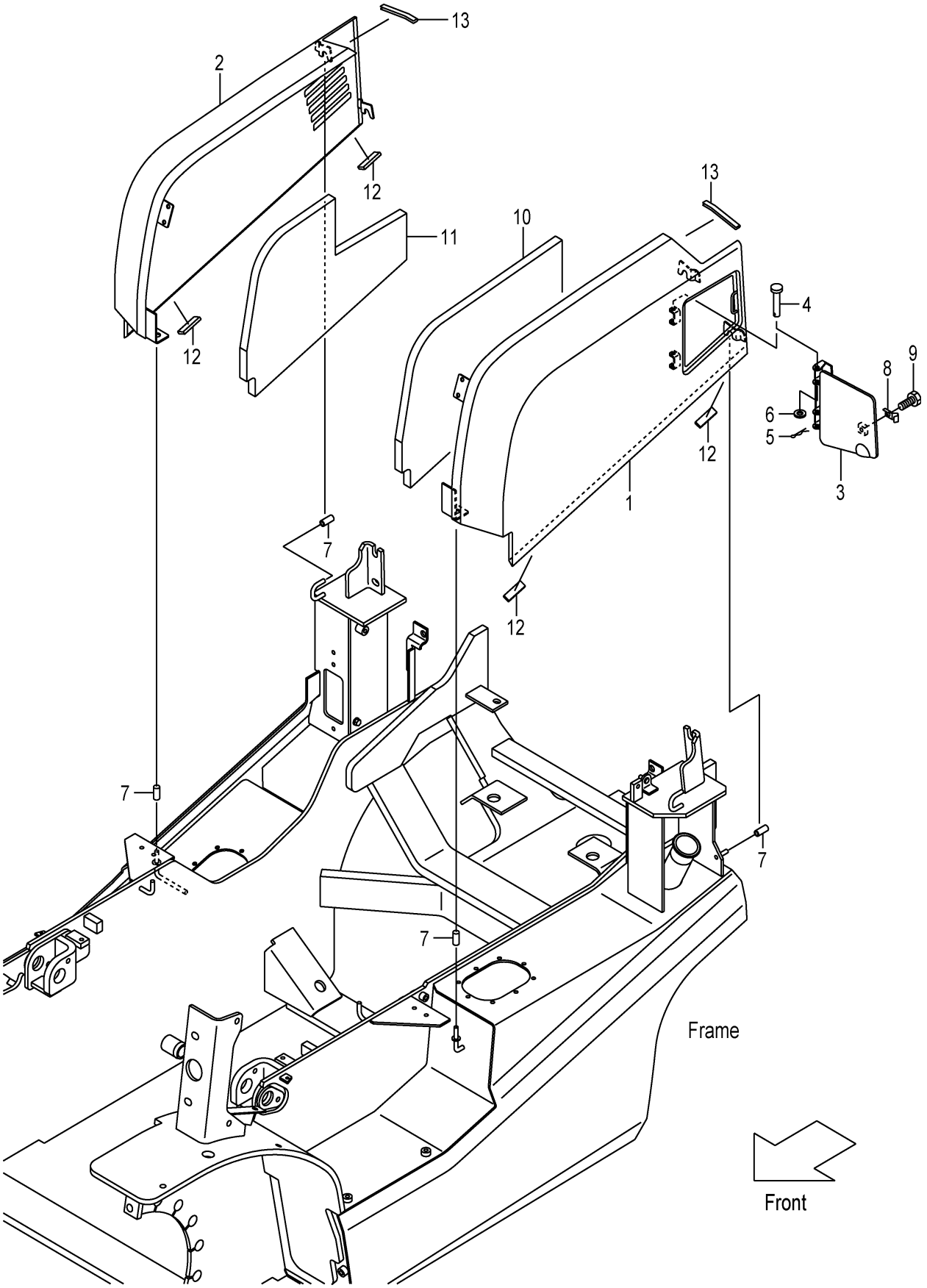

A:FD35T3S

Item No	Part No.	Mark	Description		Req'd	Remarks : Serial No.
1	22N56-40252		COVER,SIDE,LH	ｶﾊﾞｰ	1	
2	22N56-40262		COVER,SIDE,RH	ｶﾊﾞｰ	1	
3	22N56-40272		COVER,FUEL-CAP	ｶﾊﾞｰ	1	
4	02262-08045		PIN,CLEVIS	ﾋﾟﾝ	2	
5	216H3-92171		PIN,SNAP	ﾋﾟﾝ	2	
6	02000-00008		WASHER	ﾜｯｼｬ	2	
7	216G6-52291		CAP	ｷｬｯﾌﾟ	6	
8	22N56-43252		SPRING,LEAF	ｽﾌﾟﾘﾝｸﾞ	1	
9	01183-08012		BOLT	ﾎﾞﾙﾄ	1	
10	22N56-40411		RUBBER,FOAM,LH	ﾗﾊﾞｰ	1	
11	22N56-40421		RUBBER,FOAM,RH	ﾗﾊﾞｰ	1	
12	22N56-43481		RUBBER	ﾗﾊﾞｰ	4	
13	243C6-42821		EDGING,L=100	ｴｯｼﾞﾝｸﾞ	2	

FIG.69 FRONT SIDE COVER

(F7C364C0) フロントサイドカバー

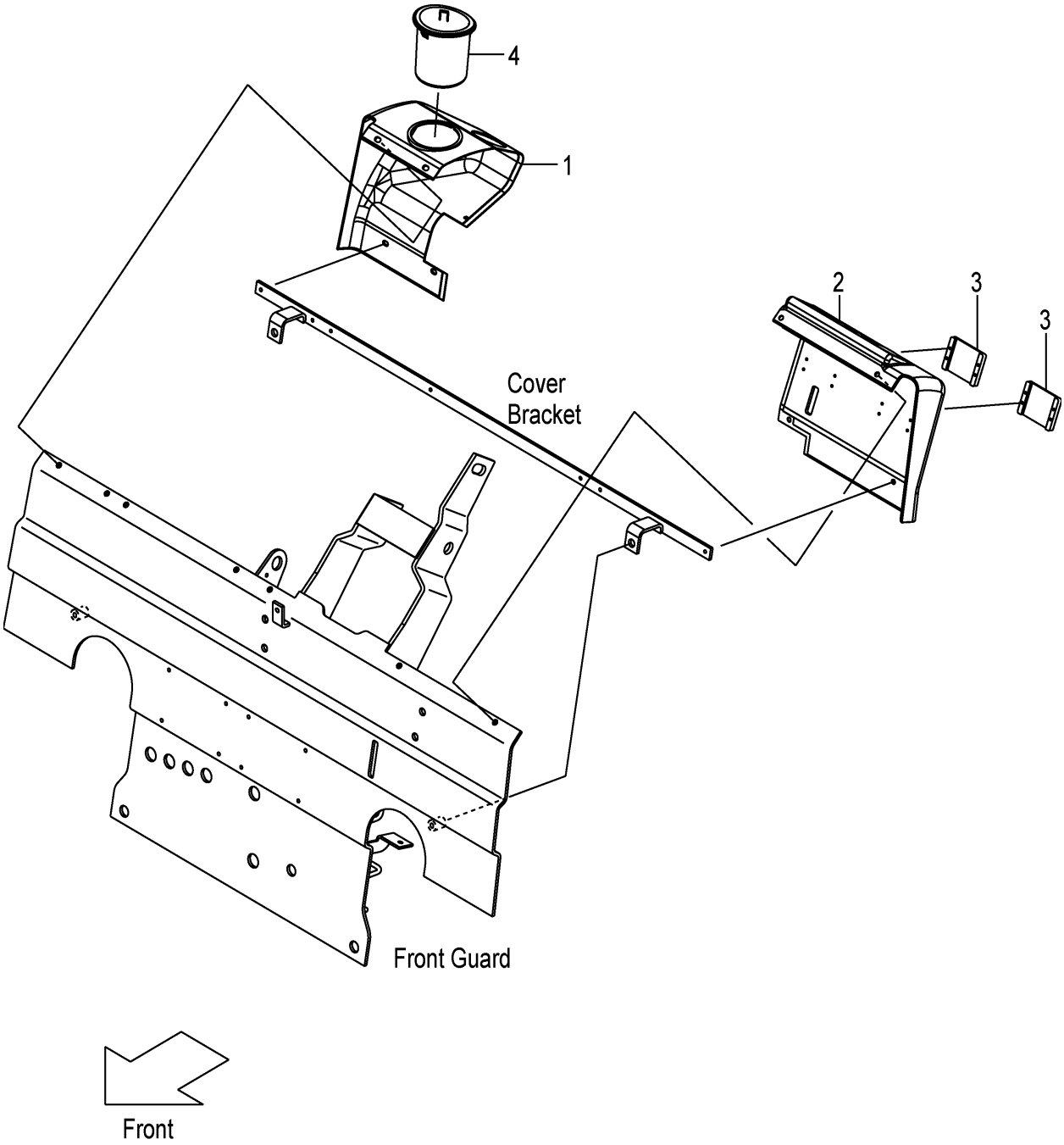

FIG.69
(F7C364C0)

A:FD35T3S

Item No	Part No.	Mark	Description		Req'd	Remarks : Serial No.
1	22N56-42711		COVER,RH	ｶﾊﾞｰ	1	
A1	22N56-42852		COVER-ASSY,LH	ｶﾊﾞｰｱｯｾﾝ	1	INC.2,3
2	22N56-42722		COVER,LH	ｶﾊﾞｰ	1	
3	22N56-42811		COVER	ｶﾊﾞｰ	2	
4	22N56-42761		CUP,HOLDER	ｶｯﾌﾟ	1	

FIG.70 SEAT

(F7C36810) シート

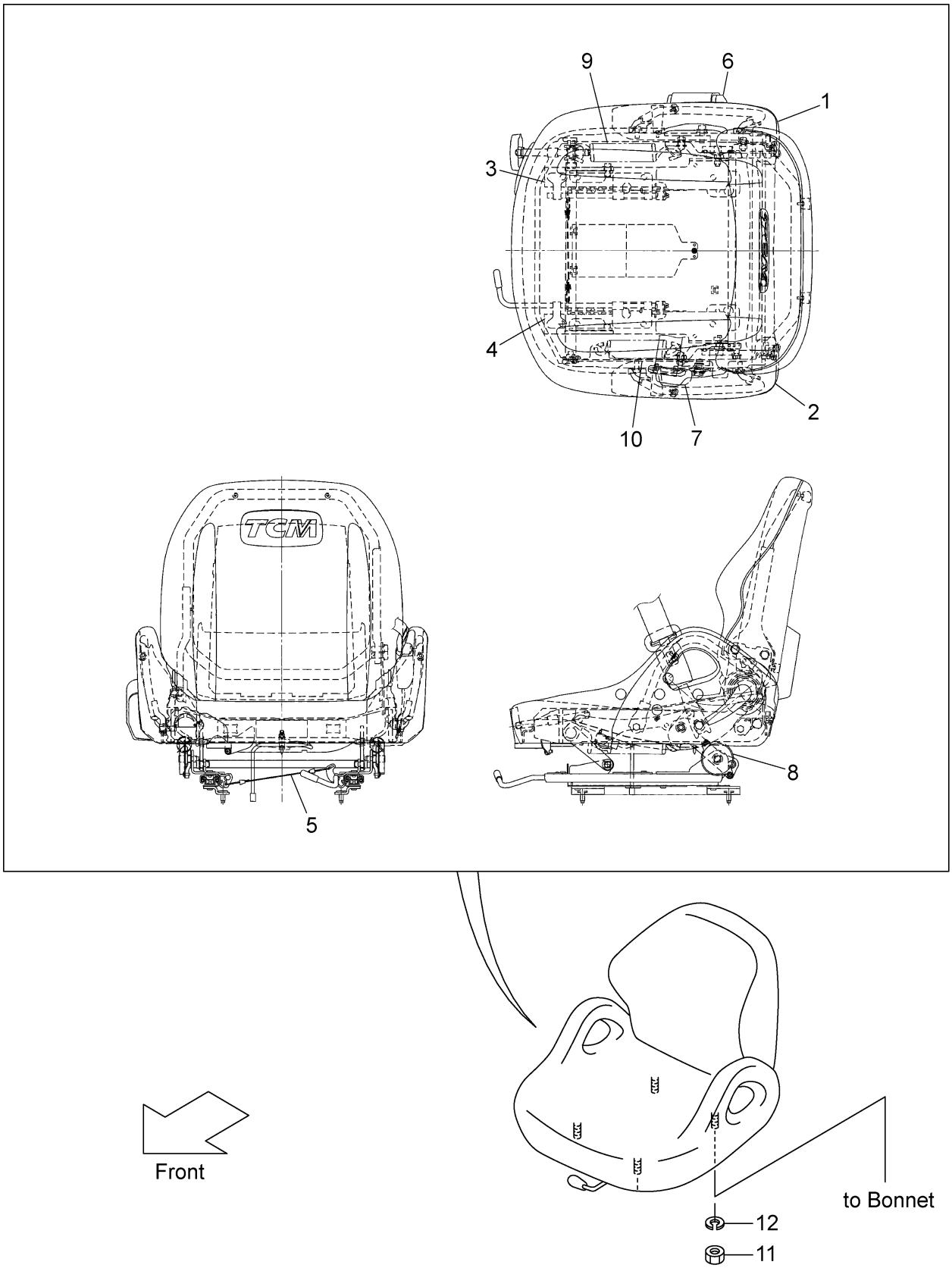

A:FD35T3S

Item No	Part No.	Mark	Description		Req'd	Remarks : Serial No.
A1	242F6-80101		SEAT-ASSY	ｼｰﾄｱｯｾﾝ	1	INC.1-10
1	242F6-82041		SHIELD,RH	ｼｰﾙﾄﾞ	1	
2	242F6-82051		SHIELD,LH	ｼｰﾙﾄﾞ	1	
3	242F6-82081		TRACK,RH	ﾄﾗｯｸ	1	
4	242F6-82091		TRACK,LH	ﾄﾗｯｸ	1	
5	242F6-82101		WIRE	ﾜｲﾔ	1	
6	242F6-82111		BELT,SEAT,OUTER	ﾍﾞﾙﾄ	1	
7	242F6-82121		BELT,SEAT,INNER	ﾍﾞﾙﾄ	1	
8	242F6-82141		ABSORBER,SUSPENSION	ｱﾌﾞｿｰﾊﾞ	2	
9	242F6-82271		SPRING,TENSION	ｽﾌﾟﾘﾝｸﾞ	1	
10	242F6-82281		SPRING,TENSION	ｽﾌﾟﾘﾝｸﾞ	1	
11	01400-00008		NUT	ﾅｯﾄ	4	
12	02010-00008		WASHER	ﾜｯｼｬ	4	

FIG.71 PUMP UNIT

(F7C37110) ﾎﾟﾝﾌﾟﾕﾆｯﾄ

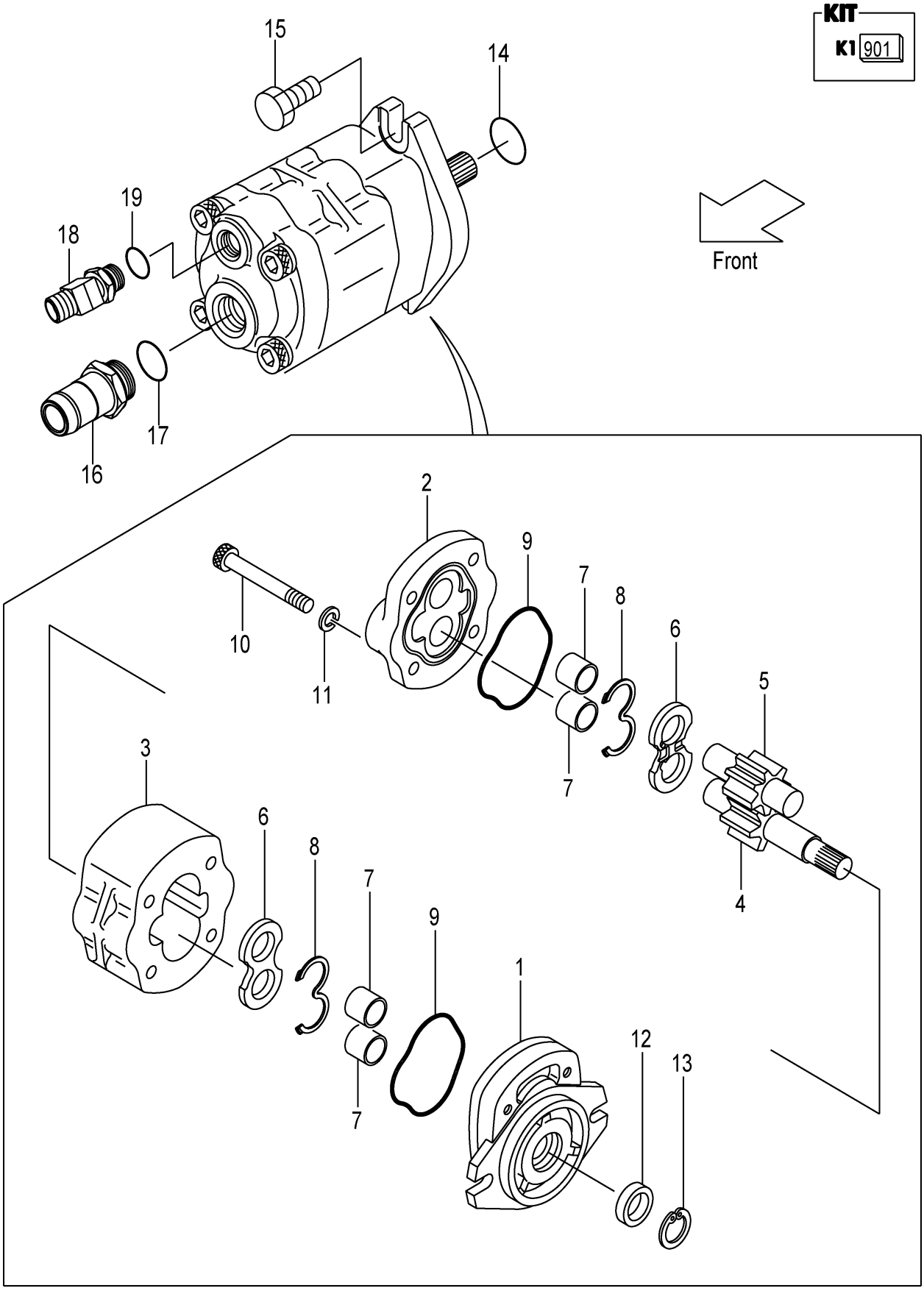

A:FD35T3S

Item No	Part No.	Mark	Description		Req'd	Remarks : Serial No.
A1	134A7-10301		PUMP-ASSY,GEAR	ｷﾞﾔｰﾎﾟﾝﾌﾟｱｯｾﾝ	1	INC.1-13
901	110F7-12001	K1	KIT,REPAIR	ﾘﾍﾟｱｷｯﾄ	1	INC.8,9,12,13
1	NO PART NO.	#	COVER,FRONT	ｶﾊﾞｰ	1	
2	NO PART NO.	#	COVER,REAR	ｶﾊﾞｰ	1	
3	NO PART NO.	#	BODY	ﾎﾞﾃﾞｨ	1	
4	NO PART NO.	#	GEAR,DRIVE	ｷﾞﾔｰ	1	
5	NO PART NO.	#	GEAR,DRIVEN	ｷﾞﾔｰ	1	
6	NO PART NO.	#	PLATE,SIDE	ﾌﾟﾚｰﾄ	2	
7	NO PART NO.	#	BUSHING	ﾌﾞｯｼﾝｸﾞ	4	
8	NO PART NO.	#*	GASKET	ｶﾞｽｹｯﾄ	2	
9	NO PART NO.	#*	GASKET	ｶﾞｽｹｯﾄ	2	
10	R-402-65004-03		BOLT	ﾎﾞﾙﾄ	4	
11	R-402-00710-12		WASHER	ﾜｯｼｬ	4	
12	NO PART NO.	#*	SEAL,OIL	ｼｰﾙ	1	
13	NO PART NO.	#*	RING,SNAP	ﾘﾝｸﾞ	1	
14	03340-00140		O-RING	Oﾘﾝｸﾞ	1	
15	01185-10055		BOLT	ﾎﾞﾙﾄ	2	
A2	225A7-62021		NIPPLE-ASSY	ﾆｯﾌﾟﾙｱｯｾﾝ	1	INC.16,17
16	NO PART NO.	#	NIPPLE	ﾆｯﾌﾟﾙ	1	
17	03320-00290		O-RING	Oﾘﾝｸﾞ	1	
A3	216M7-62101		ADAPTER-ASSY	ｱﾀﾞﾌﾟﾀｱｯｾﾝ	1	INC.18,19
18	NO PART NO.	#	ADAPTER	ｱﾀﾞﾌﾟﾀ	1	
19	03320-00180		O-RING	Oﾘﾝｸﾞ	1	

FIG.72 CONTROL VALVE [2SV]

(F7C37310) ｺﾝﾄﾛｰﾙﾊﾞﾙﾌﾞ

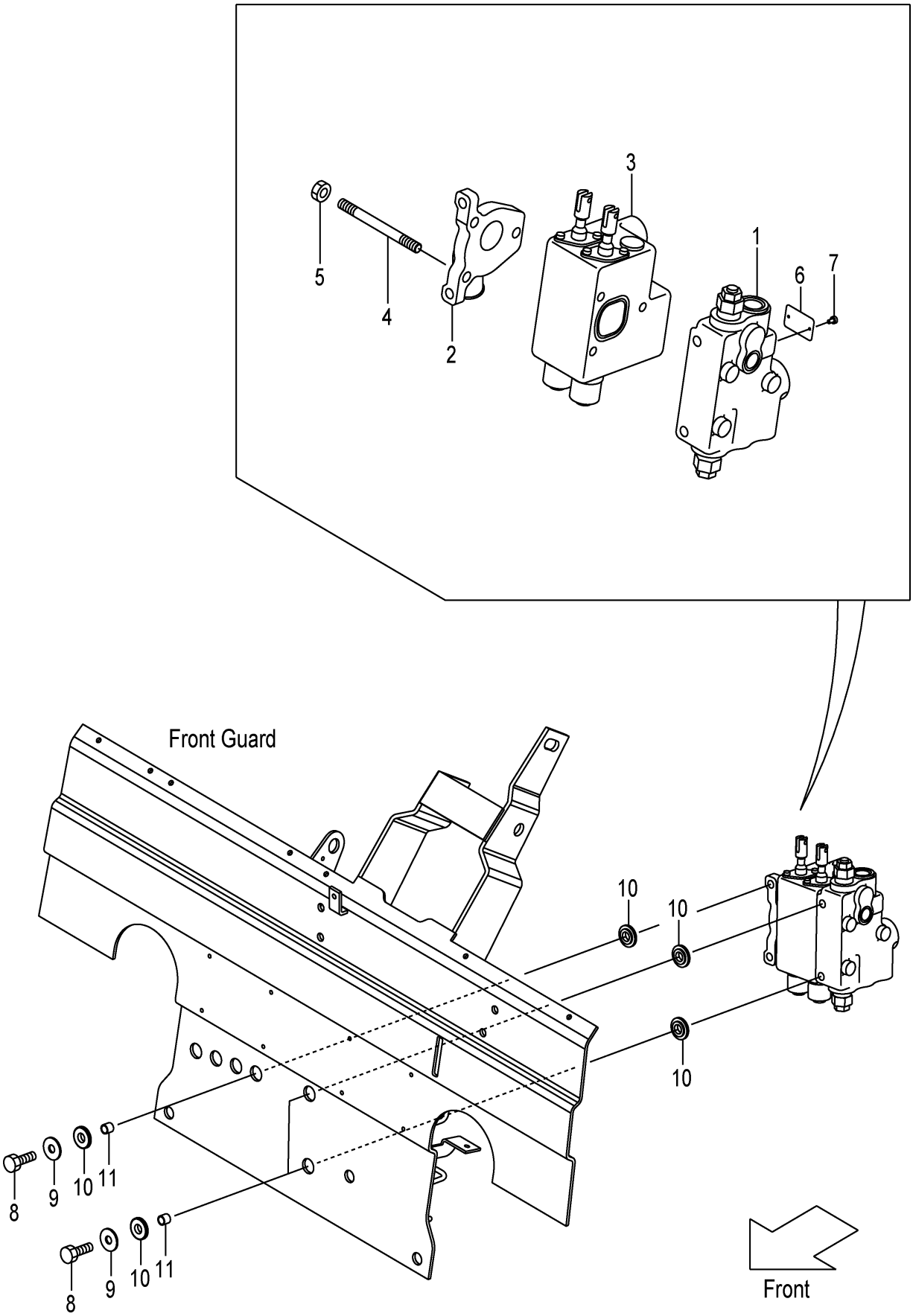

A:FD35T3S

Item No	Part No.	Mark	Description		Req'd	Remarks : Serial No.
A1	22N57-30221		VALVE-ASSY,CONTROL	ｺﾝﾄﾛｰﾙﾊﾞﾙﾌﾞｱｯｾﾝ	1	INC.1-7
1	22N57-33011		COVER,FRONT	ｶﾊﾞｰ	1	SEE FIG.82
2	22N57-33021		COVER,REAR	ｶﾊﾞｰ	1	
3	22N57-33031		VALVE,COMBINATION	ﾊﾞﾙﾌﾞ	1	SEE FIG.83
4	22N57-32321		BOLT,STUD	ﾎﾞﾙﾄ	3	
5	22N57-33141		NUT	ﾅｯﾄ	3	
6	22N57-33301		PLATE,NAME	ﾌﾟﾚｰﾄ	1	
7	22N57-33311		RIVET	ﾘﾍﾞｯﾄ	2	
8	22N57-32041		BOLT	ﾎﾞﾙﾄ	3	
9	216G7-32021		WASHER,PLANE	ﾜｯｼｬ	3	
10	22N57-42201		RUBBER,VALVE	ﾗﾊﾞｰ	6	
11	22N57-42211		COLLAR	ｶﾗｰ	3	

FIG.73 CONTROL VALVE [3SV]

(F7C37320) ｺﾝﾄﾛｰﾙﾊﾞﾙﾌﾞ

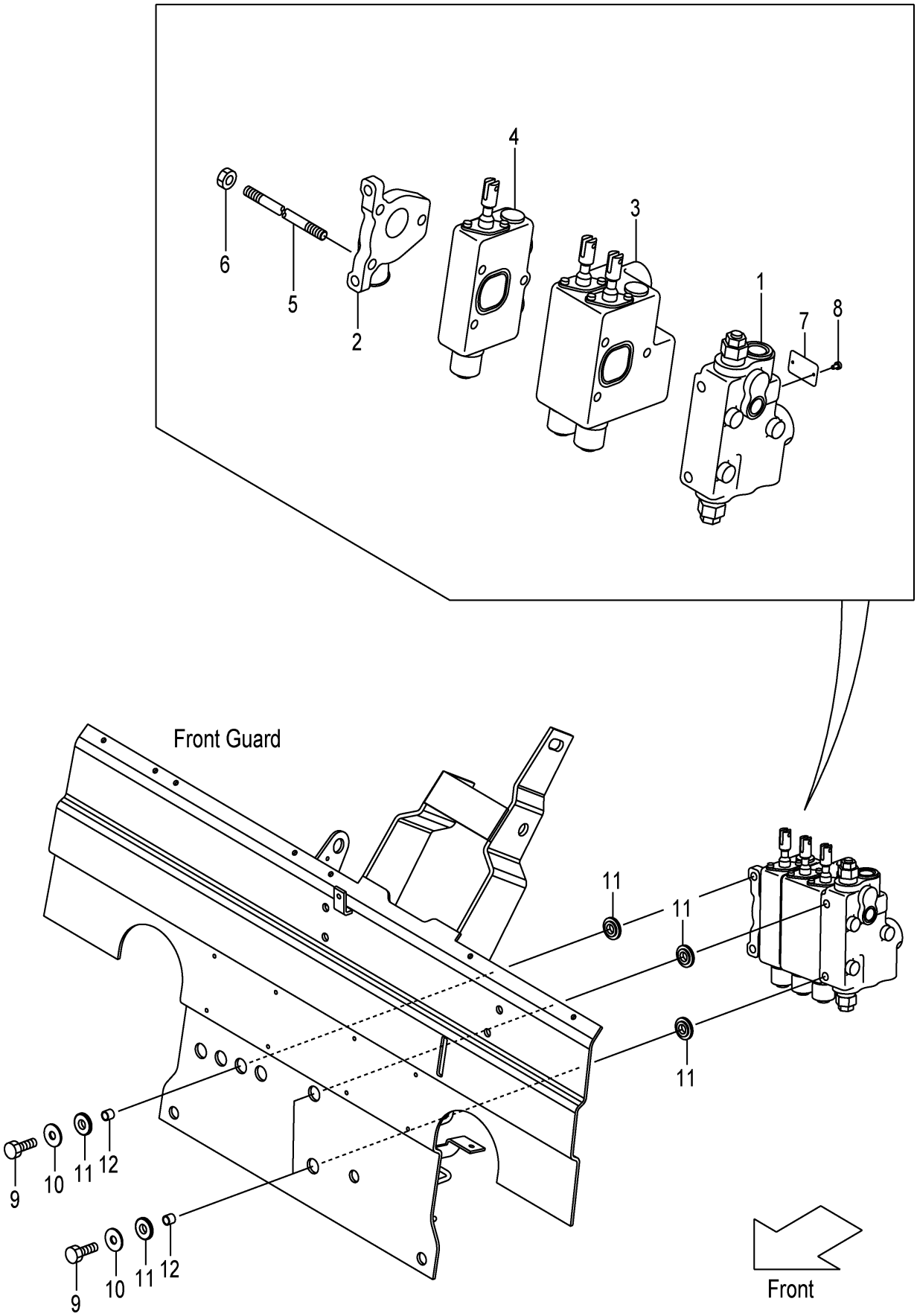

A:FD35T3S

Item No	Part No.	Mark	Description		Req'd	Remarks : Serial No.
A1	22N57-30231		VALVE-ASSY,CONTROL	ｺﾝﾄﾛｰﾙﾊﾞﾙﾌﾞｱｯｾﾝ	1	[3SV] INC.1-8
1	22N57-33011		COVER,FRONT	ｶﾊﾞｰ	1	[3SV]SEE FIG.82
2	22N57-33021		COVER,REAR	ｶﾊﾞｰ	1	[3SV]
3	22N57-33031		VALVE,COMBINATION	ﾊﾞﾙﾌﾞ	1	[3SV]SEE FIG.83
4	22N57-33041		SECTION,VALVE	ｾｸｼｮﾝ	1	[3SV]SEE FIG.84
5	22N57-32331		BOLT,STUD	ﾎﾞﾙﾄ	3	[3SV]
6	22N57-33141		NUT	ﾅｯﾄ	3	[3SV]
7	22N57-33301		PLATE,NAME	ﾌﾟﾚｰﾄ	1	[3SV]
8	22N57-33311		RIVET	ﾘﾍﾞｯﾄ	2	[3SV]
9	22N57-32041		BOLT	ﾎﾞﾙﾄ	3	[3SV]
10	216G7-32021		WASHER,PLANE	ﾜｯｼｬ	3	[3SV]
11	22N57-42201		RUBBER,VALVE	ﾗﾊﾞｰ	6	[3SV]
12	22N57-42211		COLLAR	ｶﾗｰ	3	[3SV]

FIG.74 CONTROL VALVE [4SV]

(F7C37330) コントロールバルブ

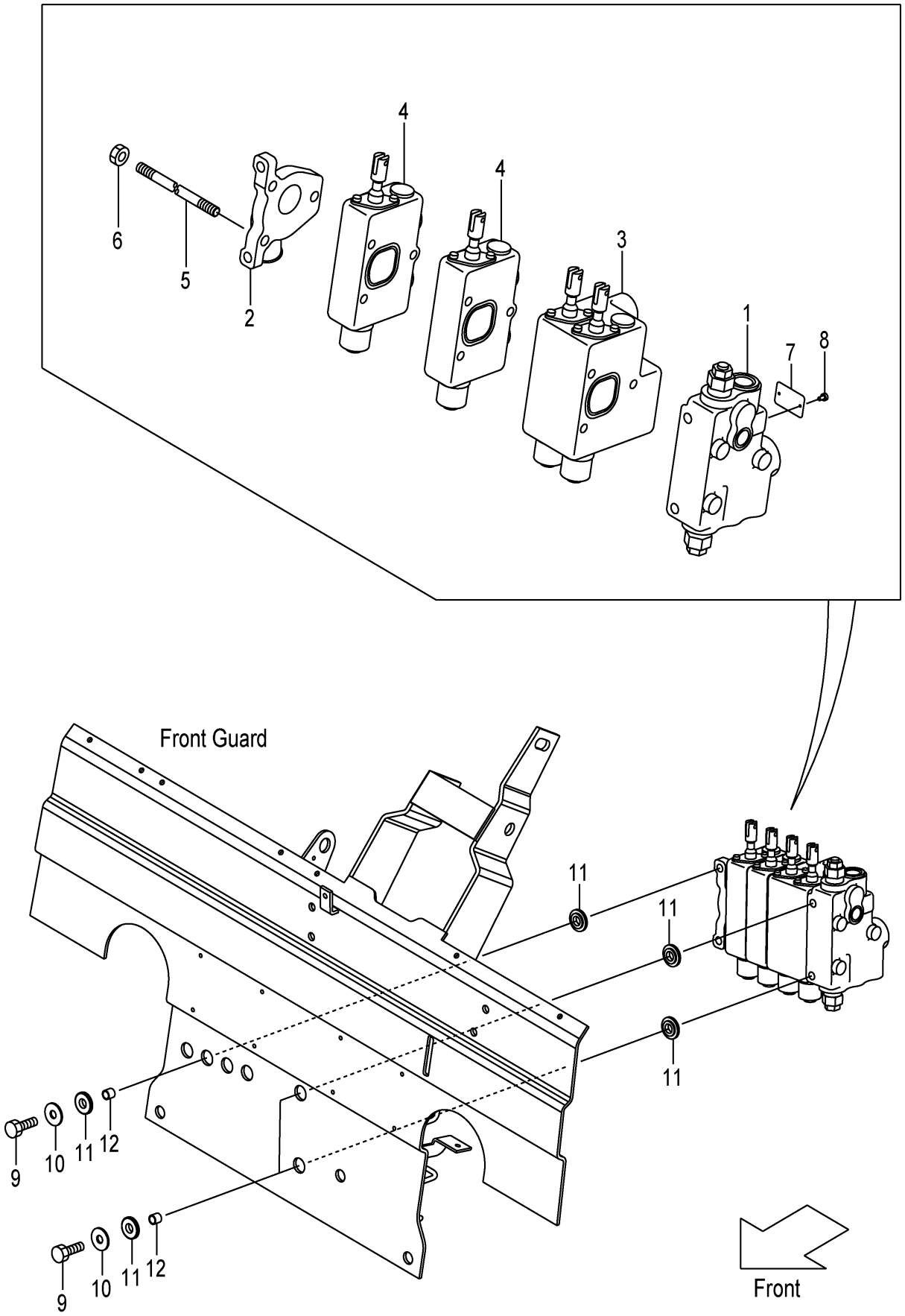

A:FD35T3S

Item No	Part No.	Mark	Description		Req'd	Remarks : Serial No.
A1	22N57-30241		VALVE-ASSY,CONTROL	ｺﾝﾄﾛｰﾙﾊﾞﾙﾌﾞｱｯｾﾝ	1	[4SV] INC.1-8
1	22N57-33011		COVER,FRONT	ｶﾊﾞｰ	1	[4SV]SEE FIG.82
2	22N57-33021		COVER,REAR	ｶﾊﾞｰ	1	[4SV]
3	22N57-33031		VALVE,COMBINATION	ﾊﾞﾙﾌﾞ	1	[4SV]SEE FIG.83
4	22N57-33041		SECTION,VALVE	ｾｸｼｮﾝ	2	[4SV]SEE FIG.84
5	22N57-32341		BOLT,STUD	ﾎﾞﾙﾄ	3	[4SV]
6	22N57-33141		NUT	ﾅｯﾄ	3	[4SV]
7	22N57-33301		PLATE,NAME	ﾌﾟﾚｰﾄ	1	[4SV]
8	22N57-33311		RIVET	ﾘﾍﾞｯﾄ	2	[4SV]
9	22N57-32041		BOLT	ﾎﾞﾙﾄ	3	[4SV]
10	216G7-32021		WASHER,PLANE	ﾜｯｼｬ	3	[4SV]
11	22N57-42201		RUBBER,VALVE	ﾗﾊﾞｰ	6	[4SV]
12	22N57-42211		COLLAR	ｶﾗｰ	3	[4SV]

FIG.75 CONTROL VALVE [5SV]

(F7C37340) コントロールバルブ

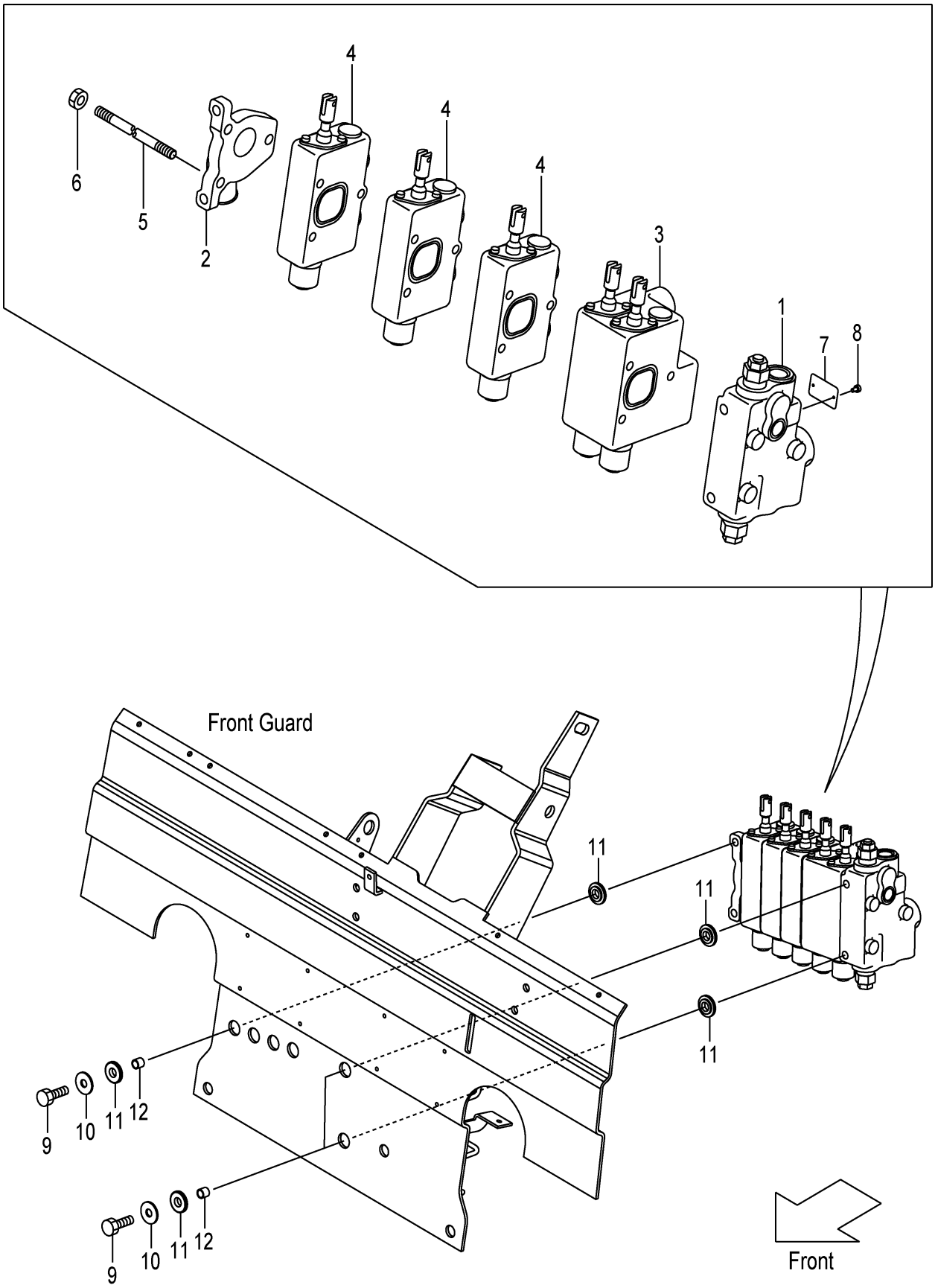

A:FD35T3S

Item No	Part No.	Mark	Description		Req'd	Remarks : Serial No.
A1	22N57-30251		VALVE-ASSY,CONTROL	ｺﾝﾄﾛｰﾙﾊﾞﾙﾌﾞｱｯｾﾝ	1	[5SV] INC.1-8
1	22N57-33011		COVER,FRONT	ｶﾊﾞｰ	1	[5SV]SEE FIG.82
2	22N57-33021		COVER,REAR	ｶﾊﾞｰ	1	[5SV]
3	22N57-33031		VALVE,COMBINATION	ﾊﾞﾙﾌﾞ	1	[5SV]SEE FIG.83
4	22N57-33041		SECTION,VALVE	ｾｸｼｮﾝ	3	[5SV]SEE FIG.84
5	22N57-32351		BOLT,STUD	ﾎﾞﾙﾄ	3	[5SV]
6	22N57-33141		NUT	ﾅｯﾄ	3	[5SV]
7	22N57-33301		PLATE,NAME	ﾌﾟﾚｰﾄ	1	[5SV]
8	22N57-33311		RIVET	ﾘﾍﾞｯﾄ	2	[5SV]
9	22N57-32041		BOLT	ﾎﾞﾙﾄ	3	[5SV]
10	216G7-32021		WASHER,PLANE	ﾜｯｼｬ	3	[5SV]
11	22N57-42201		RUBBER,VALVE	ﾗﾊﾞｰ	6	[5SV]
12	22N57-42211		COLLAR	ｶﾗｰ	3	[5SV]

FIG.76 CONTROL VALVE FITTING

(F7C37350) ｺﾝﾄﾛｰﾙﾊﾞﾙﾌﾞﾌｨｯﾃｨﾝｸﾞ

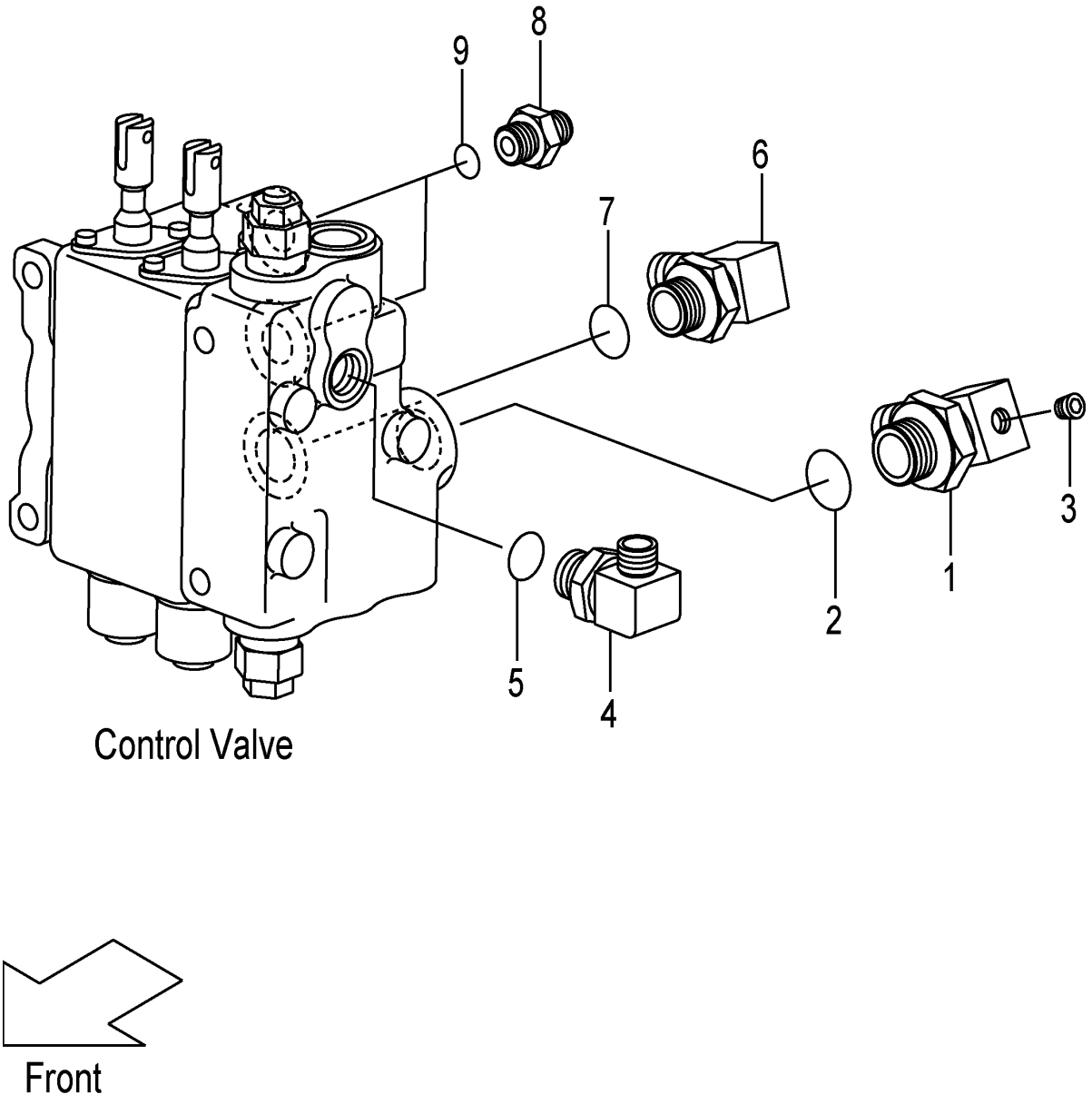

A:FD35T3S

Item No	Part No.	Mark	Description		Req'd	Remarks : Serial No.
A1	22N57-63011		ELBOW-ASSY	ｴﾙﾎﾞｱｯｾﾝ	1	INC.1-3
1	NO PART NO.	#	ELBOW	ｴﾙﾎﾞ	1	
2	03320-00240		O-RING	Oﾘﾝｸﾞ	1	
3	23870-52871		PLUG,SUNK	ﾌﾟﾗｸﾞ	1	
A2	04150-20202		ELBOW-ASSY	ｴﾙﾎﾞｱｯｾﾝ	1	INC.4,5
4	NO PART NO.	#	ELBOW	ｴﾙﾎﾞ	1	
5	03320-00110		O-RING	Oﾘﾝｸﾞ	1	
A3	04150-20404		ELBOW-ASSY	ｴﾙﾎﾞｱｯｾﾝ	1	INC.6,7
6	NO PART NO.	#	ELBOW	ｴﾙﾎﾞ	1	
7	03320-00180		O-RING	Oﾘﾝｸﾞ	1	
A4	277H7-60601		NIPPLE-ASSY	ﾆｯﾌﾟﾙｱｯｾﾝ	2	INC.8,9
8	NO PART NO.	#	NIPPLE	ﾆｯﾌﾟﾙ	2	
9	03320-00140		O-RING	Oﾘﾝｸﾞ	2	

FIG.77 VALVE CONTROL [2SV]

(F7C373A0) ﾊﾞﾙﾌﾞｺﾝﾄﾛｰﾙ

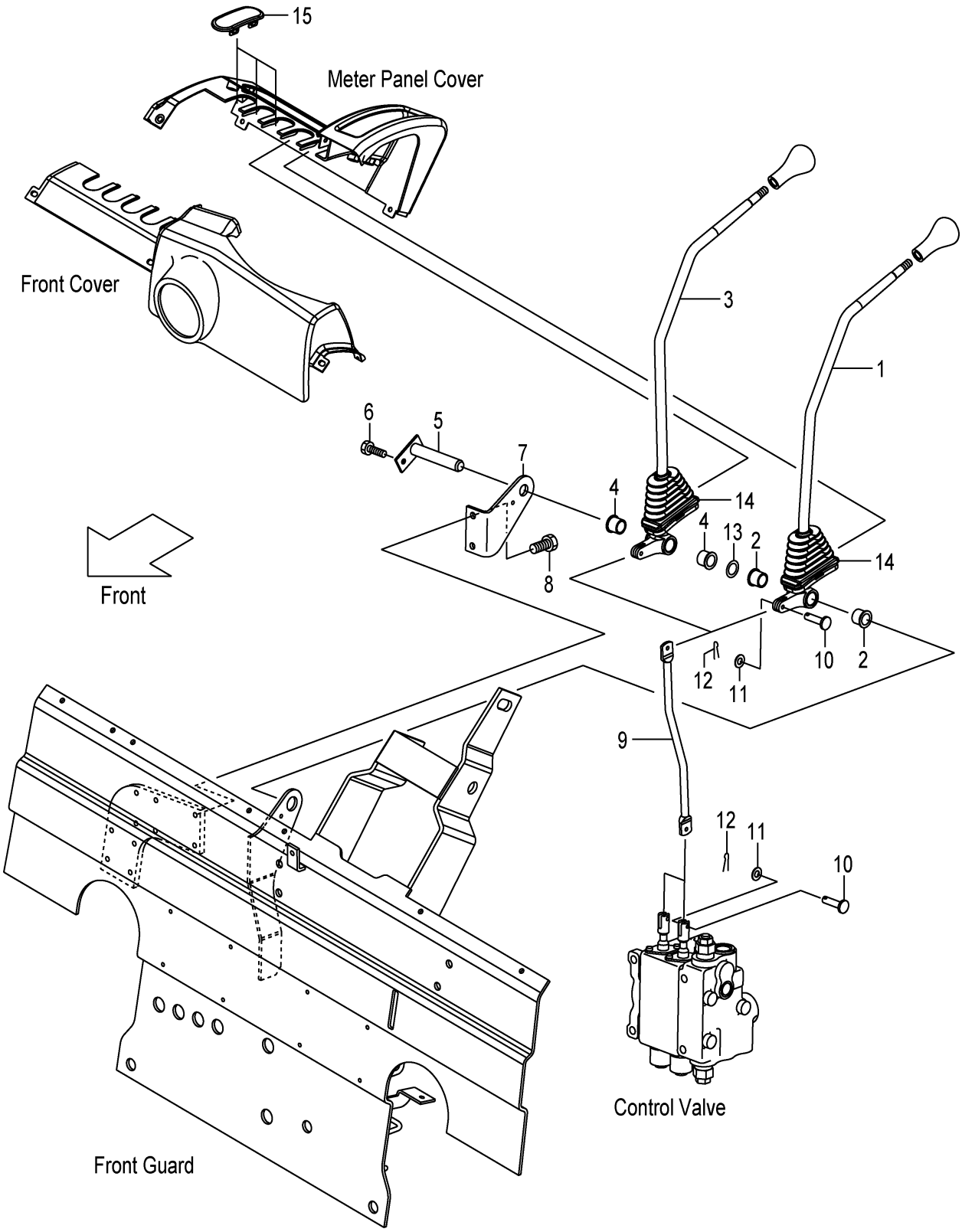

A:FD35T3S

Item No	Part No.	Mark	Description		Req'd	Remarks : Serial No.
A1	22N57-40011		LEVER-ASSY,LIFT	ﾘﾌﾄﾚﾊﾞｰｱｯｾﾝ	1	INC.1,2
1	NO PART NO.	#	LEVER,LIFT	ﾚﾊﾞｰ	1	
2	214A7-42071		BUSHING	ﾌﾞｯｼﾝｸﾞ	2	
A2	22N57-40021		LEVER-ASSY,TILT	ﾃｨﾙﾄﾚﾊﾞｰｱｯｾﾝ	1	INC.3,4
3	NO PART NO.	#	LEVER,TILT	ﾚﾊﾞｰ	1	
4	214A7-42071		BUSHING	ﾌﾞｯｼﾝｸﾞ	2	
5	23647-40041		SHAFT,2SV-LEVER	ｼｬﾌﾄ	1	
6	01183-06012		BOLT	ﾎﾞﾙﾄ	1	
7	22N57-42001		BRACKET,VALVE-LEVER	ﾌﾞﾗｹｯﾄ	1	
8	01183-08012		BOLT	ﾎﾞﾙﾄ	2	
9	22N57-42101		JOINT	ｼﾞｮｲﾝﾄ	2	
10	22N57-42121		PIN,CLEVIS	ﾋﾟﾝ	4	
11	02000-00005		WASHER	ﾜｯｼｬ	4	
12	02200-16010		PIN,COTTER	ﾋﾟﾝ	4	
13	22517-40051		SHIM,T-0.2	ｼﾑ	3	
14	22N57-42151		BOOT	ﾌﾞｰﾂ	2	
15	22N57-42161		COVER,VALVE-LEVER	ｶﾊﾞｰ	3	

FIG.78 VALVE CONTROL [3SV]

(F7C373B0) ﾊﾞﾙﾌﾞｺﾝﾄﾛｰﾙ

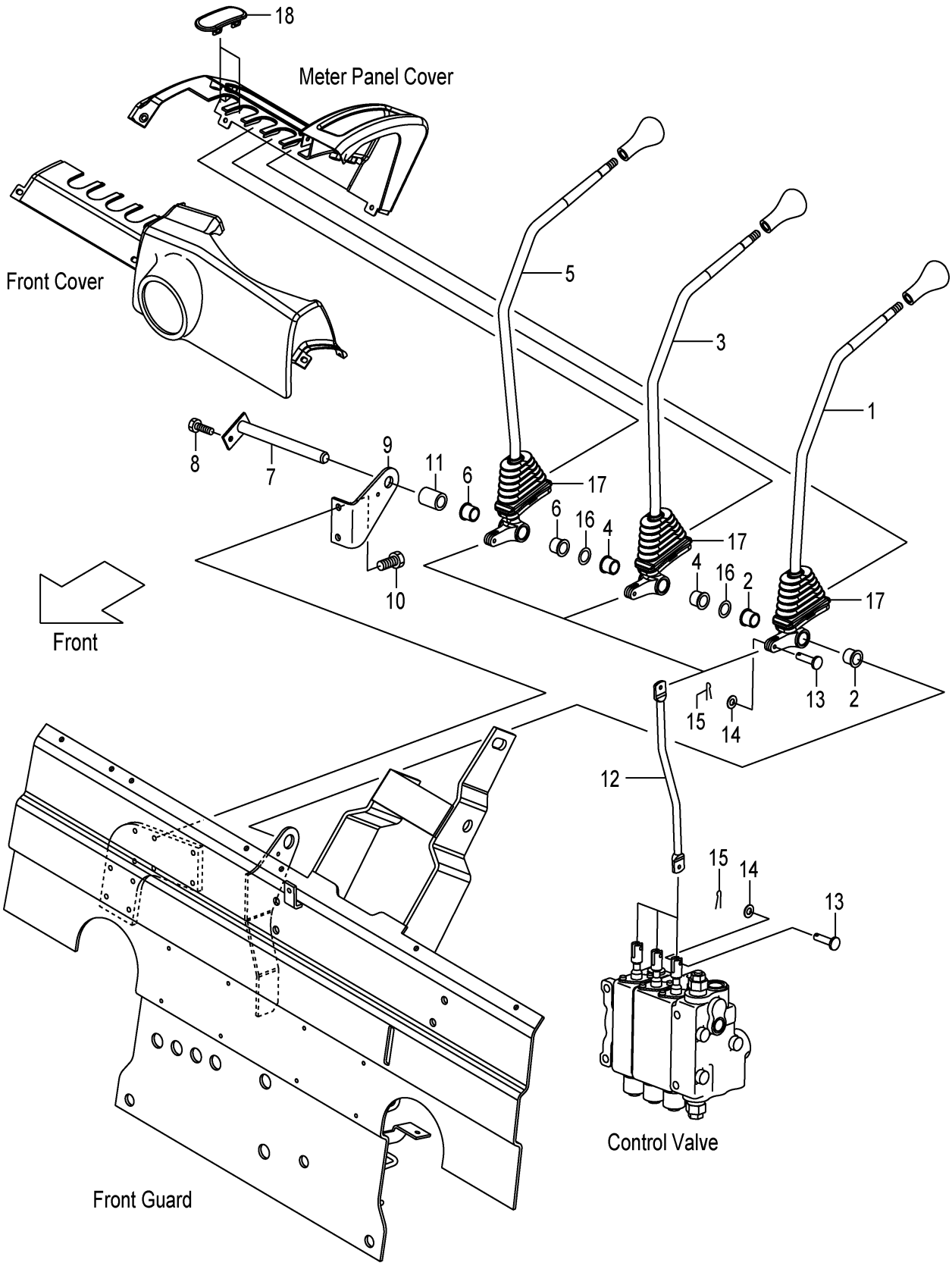

A:FD35T3S

Item No	Part No.	Mark	Description		Req'd	Remarks : Serial No.
A1	22N57-40011		LEVER-ASSY,LIFT	ﾘﾌﾄﾚﾊﾞｰｱｯｾﾝ	1	[3SV] INC.1,2
1	NO PART NO.	#	LEVER,LIFT	ﾚﾊﾞｰ	1	[3SV]
2	214A7-42071		BUSHING	ﾌﾞｯｼﾝｸﾞ	2	[3SV]
A2	22N57-40021		LEVER-ASSY,TILT	ﾃｨﾙﾄﾚﾊﾞｰｱｯｾﾝ	1	[3SV] INC.3,4
3	NO PART NO.	#	LEVER,TILT	ﾚﾊﾞｰ	1	[3SV]
4	214A7-42071		BUSHING	ﾌﾞｯｼﾝｸﾞ	2	[3SV]
A3	22N57-40031		LEVER-ASSY,THIRD	ｻｰﾄﾞﾚﾊﾞｰｱｯｾﾝ	1	[3SV] INC.5,6
5	NO PART NO.	#	LEVER,THIRD	ﾚﾊﾞｰ	1	[3SV]
6	214A7-42071		BUSHING	ﾌﾞｯｼﾝｸﾞ	2	[3SV]
7	23457-42041		SHAFT,3&4SV-LEVER	ｼｬﾌﾄ	1	[3SV]
8	01183-06012		BOLT	ﾎﾞﾙﾄ	1	[3SV]
9	22N57-42001		BRACKET,VALVE-LEVER	ﾌﾞﾗｹｯﾄ	1	[3SV]
10	01183-08012		BOLT	ﾎﾞﾙﾄ	2	[3SV]
11	23657-42131		COLLAR	ｶﾗｰ	1	[3SV]
12	22N57-42101		JOINT	ｼﾞｮｲﾝﾄ	3	[3SV]
13	22N57-42121		PIN,CLEVIS	ﾋﾟﾝ	6	[3SV]
14	02000-00005		WASHER	ﾜｯｼｬ	6	[3SV]
15	02200-16010		PIN,COTTER	ﾋﾟﾝ	6	[3SV]
16	22517-40051		SHIM,T-0.2	ｼﾑ	6	[3SV]
17	22N57-42151		BOOT	ﾌﾞｰﾂ	3	[3SV]
18	22N57-42161		COVER,VALVE-LEVER	ｶﾊﾞｰ	2	[3SV]

FIG.79 VALVE CONTROL [4SV]

(F7C373C0) ﾊﾞﾙﾌﾞｺﾝﾄﾛｰﾙ

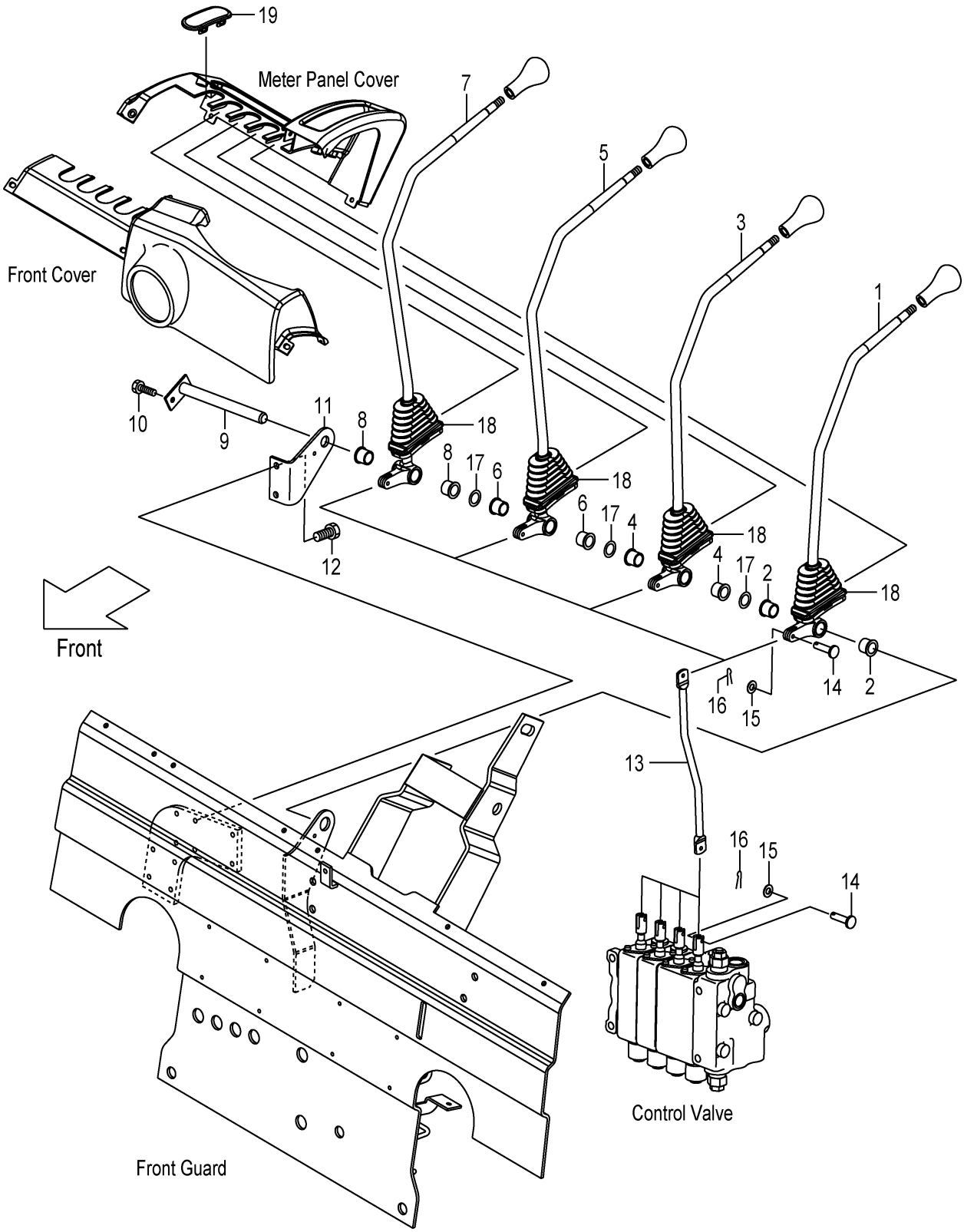

A:FD35T3S

Item No	Part No.	Mark	Description		Req'd	Remarks : Serial No.
A1	22N57-40011		LEVER-ASSY,LIFT	ﾘﾌﾄﾚﾊﾞｰｱｯｾﾝ	1	[4SV] INC.1,2
1	NO PART NO.	#	LEVER,LIFT	ﾚﾊﾞｰ	1	[4SV]
2	214A7-42071		BUSHING	ﾌﾞｯｼﾝｸﾞ	2	[4SV]
A2	22N57-40021		LEVER-ASSY,TILT	ﾃｨﾙﾄﾚﾊﾞｰｱｯｾﾝ	1	[4SV] INC.3,4
3	NO PART NO.	#	LEVER,TILT	ﾚﾊﾞｰ	1	[4SV]
4	214A7-42071		BUSHING	ﾌﾞｯｼﾝｸﾞ	2	[4SV]
A3	22N57-40031		LEVER-ASSY,THIRD	ｻｰﾄﾞﾚﾊﾞｰｱｯｾﾝ	1	[4SV] INC.5,6
5	NO PART NO.	#	LEVER,THIRD	ﾚﾊﾞｰ	1	[4SV]
6	214A7-42071		BUSHING	ﾌﾞｯｼﾝｸﾞ	2	[4SV]
A4	22N57-40041		LEVER-ASSY,FOURTH	ﾌｫｰｽﾚﾊﾞｰｱｯｾﾝ	1	[4SV] INC.7,8
7	NO PART NO.	#	LEVER,FOURTH	ﾚﾊﾞｰ	1	[4SV]
8	214A7-42071		BUSHING	ﾌﾞｯｼﾝｸﾞ	2	[4SV]
9	23457-42041		SHAFT,3&4SV-LEVER	ｼｬﾌﾄ	1	[4SV]
10	01183-06012		BOLT	ﾎﾞﾙﾄ	1	[4SV]
11	22N57-42001		BRACKET,VALVE-LEVER	ﾌﾞﾗｹｯﾄ	1	[4SV]
12	01183-08012		BOLT	ﾎﾞﾙﾄ	2	[4SV]
13	22N57-42101		JOINT	ｼﾞｮｲﾝﾄ	4	[4SV]
14	22N57-42121		PIN,CLEVIS	ﾋﾟﾝ	8	[4SV]
15	02000-00005		WASHER	ﾜｯｼｬ	8	[4SV]
16	02200-16010		PIN,COTTER	ﾋﾟﾝ	8	[4SV]
17	22517-40051		SHIM,T-0.2	ｼﾑ	9	[4SV]
18	22N57-42151		BOOT	ﾌﾞｰﾂ	4	[4SV]
19	22N57-42161		COVER,VALVE-LEVER	ｶﾊﾞｰ	1	[4SV]

FIG.80 VALVE CONTROL [5SV]

(F7C373D0) ﾊﾞﾙﾌﾞｺﾝﾄﾛｰﾙ

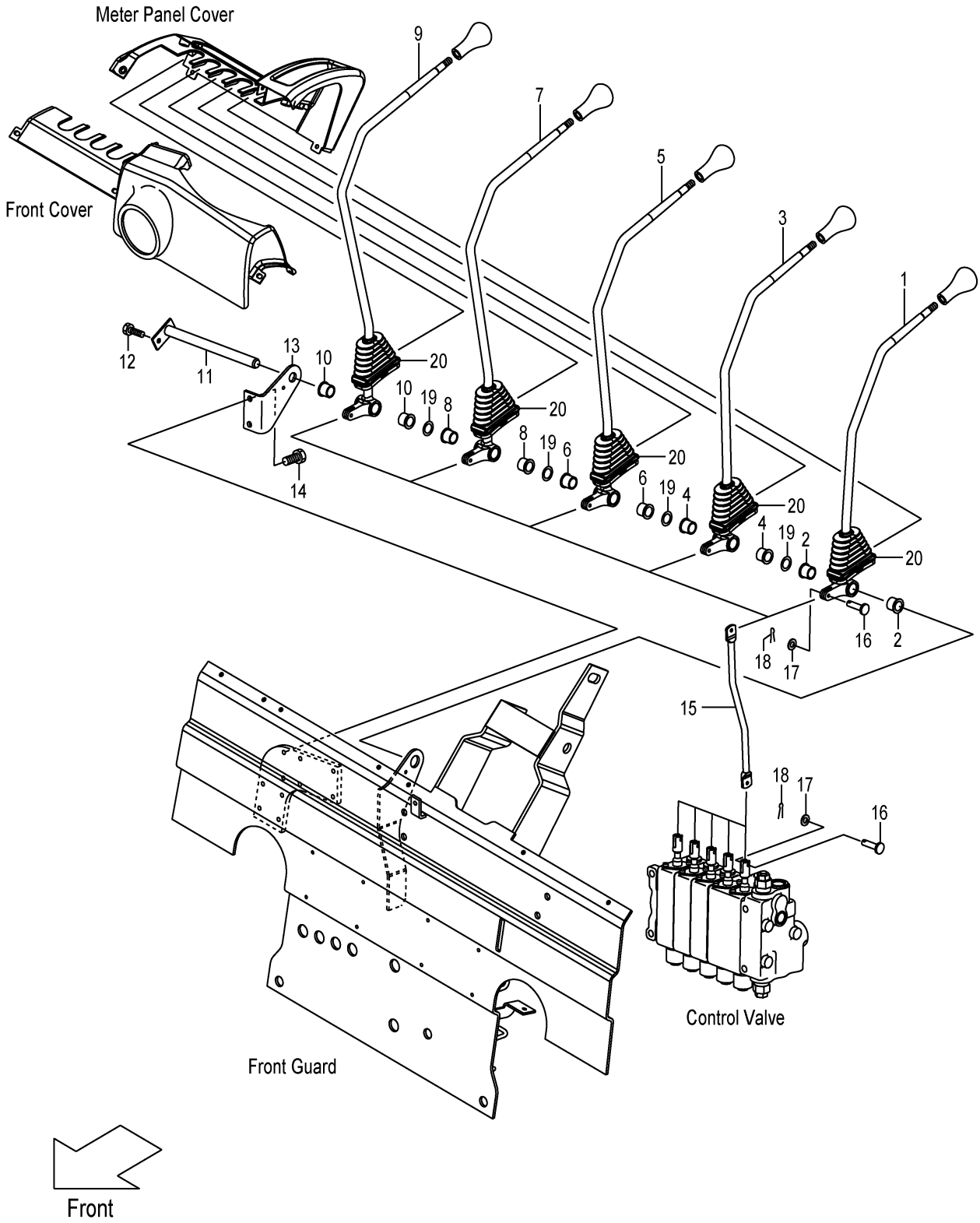

A:FD35T3S

Item No	Part No.	Mark	Description		Req'd	Remarks : Serial No.
A1	22N57-40011		LEVER-ASSY,LIFT	ﾘﾌﾄﾚﾊﾞｰｱｯｾﾝ	1	[5SV] INC.1,2
1	NO PART NO.	#	LEVER,LIFT	ﾚﾊﾞｰ	1	[5SV]
2	214A7-42071		BUSHING	ﾌﾞｯｼﾝｸﾞ	2	[5SV]
A2	22N57-40021		LEVER-ASSY,TILT	ﾃｨﾙﾄﾚﾊﾞｰｱｯｾﾝ	1	[5SV] INC.3,4
3	NO PART NO.	#	LEVER,TILT	ﾚﾊﾞｰ	1	[5SV]
4	214A7-42071		BUSHING	ﾌﾞｯｼﾝｸﾞ	2	[5SV]
A3	22N57-40031		LEVER-ASSY,THIRD	ｻｰﾄﾞﾚﾊﾞｰｱｯｾﾝ	1	[5SV] INC.5,6
5	NO PART NO.	#	LEVER,THIRD	ﾚﾊﾞｰ	1	[5SV]
6	214A7-42071		BUSHING	ﾌﾞｯｼﾝｸﾞ	2	[5SV]
A4	22N57-40041		LEVER-ASSY,FOURTH	ﾌｫｰｽﾚﾊﾞｰｱｯｾﾝ	1	[5SV] INC.7,8
7	NO PART NO.	#	LEVER,FOURTH	ﾚﾊﾞｰ	1	[5SV]
8	214A7-42071		BUSHING	ﾌﾞｯｼﾝｸﾞ	2	[5SV]
A5	22N57-40051		LEVER-ASSY,FIFTH	ﾌｨﾌｽﾚﾊﾞｰｱｯｾﾝ	1	[5SV] INC.9,10
9	NO PART NO.	#	LEVER,FIFTH	ﾚﾊﾞｰ	1	[5SV]
10	214A7-42071		BUSHING	ﾌﾞｯｼﾝｸﾞ	2	[5SV]
11	55593-02371		SHAFT,5SV-LEVER	ｼｬﾌﾄ	1	[5SV]
12	01183-06012		BOLT	ﾎﾞﾙﾄ	1	[5SV]
13	22N57-42001		BRACKET,VALVE-LEVER	ﾌﾞﾗｹｯﾄ	1	[5SV]
14	01183-08012		BOLT	ﾎﾞﾙﾄ	2	[5SV]
15	22N57-42101		JOINT	ｼﾞｮｲﾝﾄ	5	[5SV]
16	22N57-42121		PIN,CLEVIS	ﾋﾟﾝ	10	[5SV]
17	02000-00005		WASHER	ﾜｯｼｬ	10	[5SV]
18	02200-16010		PIN,COTTER	ﾋﾟﾝ	10	[5SV]
19	22517-40051		SHIM,T-0.2	ｼﾑ	12	[5SV]
20	22N57-42151		BOOT	ﾌﾞｰﾂ	5	[5SV]

FIG.81 VALVE CONTROL KNOB

(F7C373J0) ﾊﾞﾙﾌﾞｺﾝﾄﾛｰﾙﾉﾌﾞ

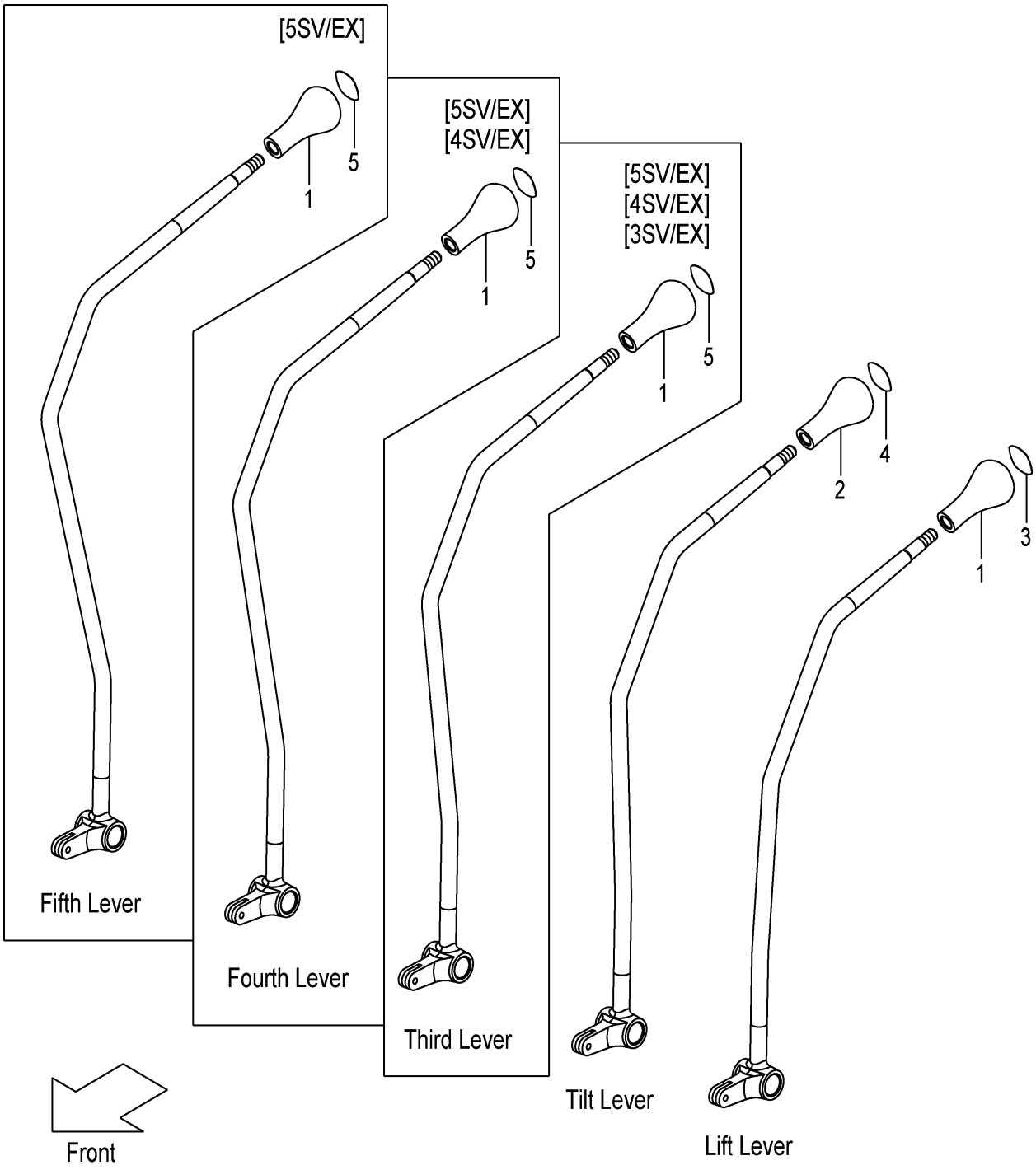

FIG.81

(F7C373J0)

A:FD35T3S

Item No	Part No.	Mark	Description	Req'd	Remarks : Serial No.
1	214A7-42181		KNOB,VALVE-LEVER ﾉﾌﾞ	1	
-	214A7-42181		KNOB,VALVE-LEVER ﾉﾌﾞ	2	[3SV/EX]
-	214A7-42181		KNOB,VALVE-LEVER ﾉﾌﾞ	3	[4SV/EX]
-	214A7-42181		KNOB,VALVE-LEVER ﾉﾌﾞ	4	[5SV/EX]
2	281E7-42101		KNOB,VALVE-LEVER ﾉﾌﾞ	1	
3	214A7-42191		DECAL,SYMBOL,LIFT ﾃﾞｶﾙ	1	
4	214A7-42201		DECAL,SYMBOL,TILT ﾃﾞｶﾙ	1	
5	514A2-72411		DECAL,SYMBOL,SPACE ﾃﾞｶﾙ	1	[3SV/EX]
-	514A2-72411		DECAL,SYMBOL,SPACE ﾃﾞｶﾙ	2	[4SV/EX]
-	514A2-72411		DECAL,SYMBOL,SPACE ﾃﾞｶﾙ	3	[5SV/EX]

FIG.82 FRONT COVER

(F7C373M0) フロントカバー

KIT

K1 901

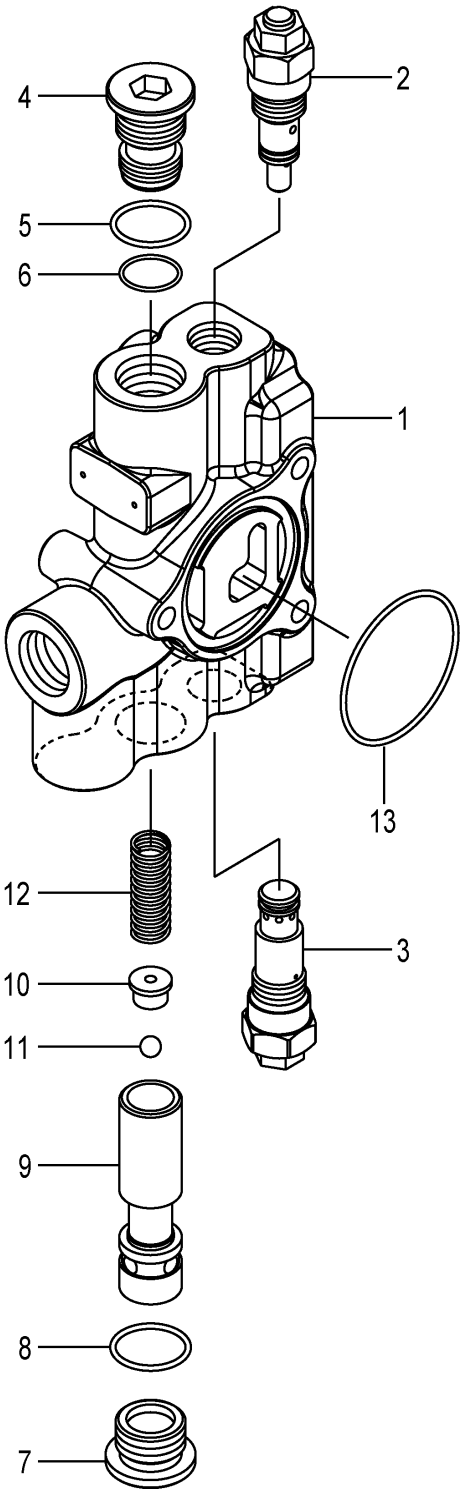

FIG.82
(F7C373M0)

A:FD35T3S

Item No	Part No.	Mark	Description		Req'd	Remarks : Serial No.
A1	22N57-33011		COVER-ASSY,FRONT	ﾌﾛﾝﾄｶﾊﾞｰｱｯｾﾝ	1	INC.1-13
901	22N57-33071	K1	KIT,SEAL	ｼｰﾙｷｯﾄ	1	INC.5,6,8,13
1	NO PART NO.	#	COVER,FRONT	ｶﾊﾞｰ	1	
2	22N57-33221		VALVE,RELIEF	ﾊﾞﾙﾌﾞ	1	
3	22N57-33331		VALVE,MAIN-RELIEF	ﾊﾞﾙﾌﾞ	1	
A2	22N57-33241		PLUG-ASSY,RETAINER	ﾘﾃｰﾅﾌﾟﾗｸﾞｱｯｾﾝ	1	INC.4-6
4	NO PART NO.	#	PLUG,RETAINER	ﾌﾟﾗｸﾞ	1	
5	22N57-33351	*	O-RING	Oﾘﾝｸﾞ	1	
6	22N57-33341	*	O-RING	Oﾘﾝｸﾞ	1	
A3	22N57-33251		PLUG-ASSY,FD	ﾌﾟﾗｸﾞｱｯｾﾝ	1	INC.7,8
7	NO PART NO.	#	PLUG,FD	ﾌﾟﾗｸﾞ	1	
8	22N57-33351	*	O-RING	Oﾘﾝｸﾞ	1	
9	NO PART NO.	#	SPOOL,FD	ｽﾌﾟｰﾙ	1	
10	22N57-33271		RETAINER,BALL	ﾘﾃｰﾅ	1	
11	22N57-33281		BALL,STEEL	ﾎﾞｰﾙ	1	
12	NO PART NO.	#	SPRING	ｽﾌﾟﾘﾝｸﾞ	1	
13	22N57-33751	*	O-RING	Oﾘﾝｸﾞ	1	

FIG.83 COMBINATION VALVE

(F7C373P0) ｺﾝﾋﾞﾈｰｼｮﾝﾊﾞﾙﾌﾞ

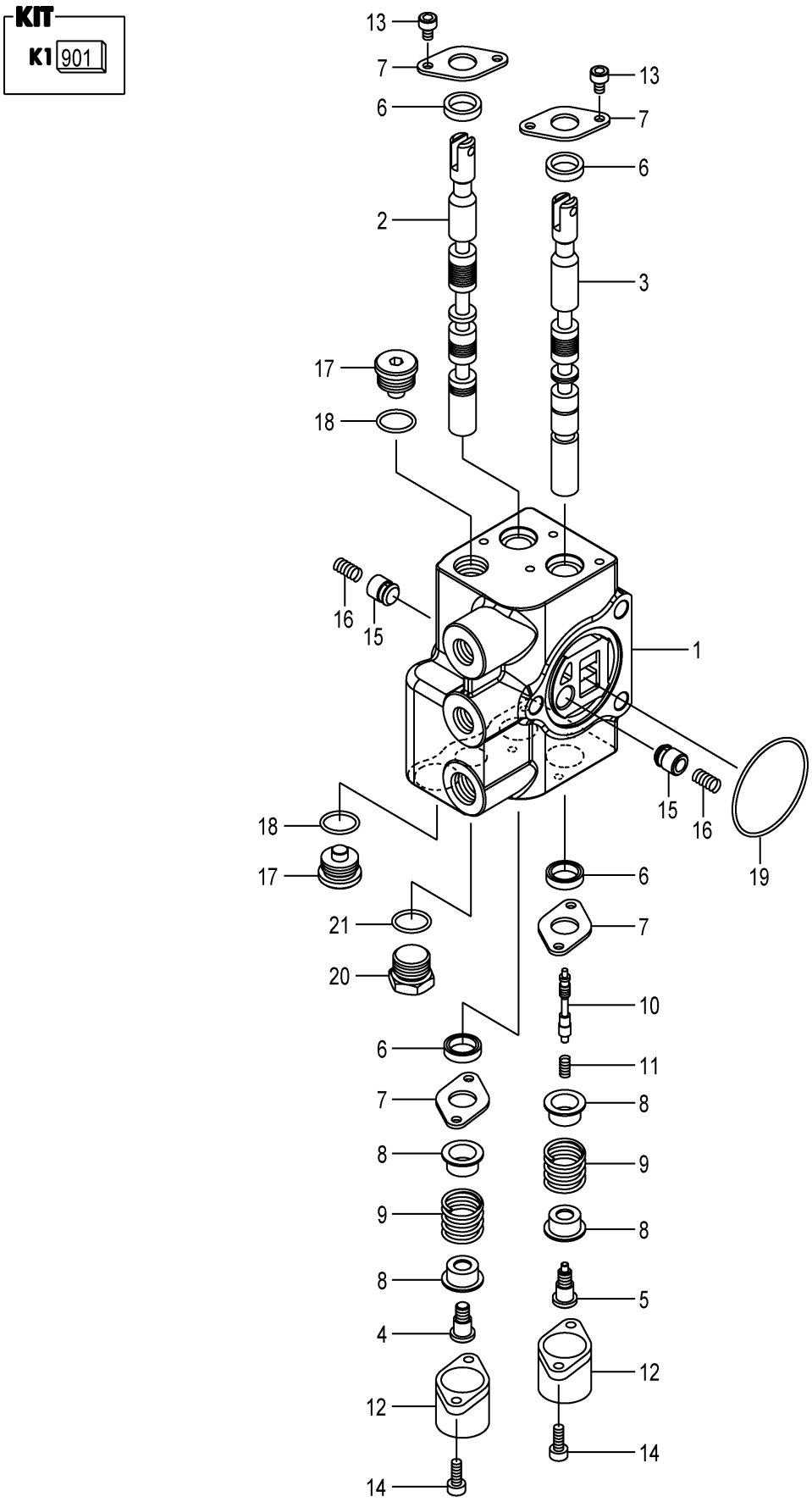

A:FD35T3S

Item No	Part No.	Mark	Description		Req'd	Remarks : Serial No.
A1	22N57-33031		VALVE-ASSY,COMBINATION		1	INC.1-21
				ｺﾝﾄﾋﾞﾈｰｼｮﾝﾊﾞﾙﾌﾞｱｯｾﾝ		
901	22N57-33131	K1	KIT,SEAL	ｼｰﾙｷｯﾄ	1	INC.6,18,19,21
1	NO PART NO.	#	BODY,VALVE	ﾎﾞﾃﾞｨ	1	
2	NO PART NO.	#	SPOOL,LIFT	ｽﾌﾟｰﾙ	1	
3	NO PART NO.	#	SPOOL,TILT	ｽﾌﾟｰﾙ	1	
4	22N57-33541		SCREW,SET	ｽｸﾘｭ	1	
5	22N57-33551		SCREW,SET	ｽｸﾘｭ	1	
6	22N57-33561	*	SEAL,DUST	ｼｰﾙ	4	
7	22N57-33571		PLATE,SEAL	ﾌﾟﾚｰﾄ	4	
8	22N57-33581		RETAINER,SPRING	ﾘﾃｰﾅ	4	
9	22N57-33591		SPRING,CENTER	ｽﾌﾟﾘﾝｸﾞ	2	
10	NO PART NO.	#	SPOOL,PILOT	ｽﾌﾟｰﾙ	1	
11	NO PART NO.	#	SPRING,TILT-LOCK	ｽﾌﾟﾘﾝｸﾞ	1	
12	22N57-33621		CAP,DC	ｷｬｯﾌﾟ	2	
13	22N57-33631		BOLT	ﾎﾞﾙﾄ	4	
14	22N57-33651		BOLT	ﾎﾞﾙﾄ	4	
15	NO PART NO.	#	POPPET,LOAD-CHECK	ﾎﾟﾍﾟｯﾄ	2	
16	22N57-33671		SPRING,LOAD-CHECK	ｽﾌﾟﾘﾝｸﾞ	2	
A2	22N57-33691		PLUG-ASSY,RETAINER	ﾘﾃｰﾅﾌﾟﾗｸﾞｱｯｾﾝ	2	INC.17,18
17	NO PART NO.	#	PLUG,RETAINER	ﾌﾟﾗｸﾞ	2	
18	22N57-33701	*	O-RING	Oﾘﾝｸﾞ	2	
19	22N57-33751	*	O-RING	Oﾘﾝｸﾞ	1	
A3	22N57-33761		PLUG-ASSY	ﾌﾟﾗｸﾞｱｯｾﾝ	1	INC.20,21
20	22N57-33771		PLUG	ﾌﾟﾗｸﾞ	1	
21	22N57-33771	*	O-RING	Oﾘﾝｸﾞ	1	

FIG.84 VALVE SECTION [3SV][4SV][5SV]

(F7C373Q0) ﾊﾞﾙﾌﾞｾｸｼｮﾝ

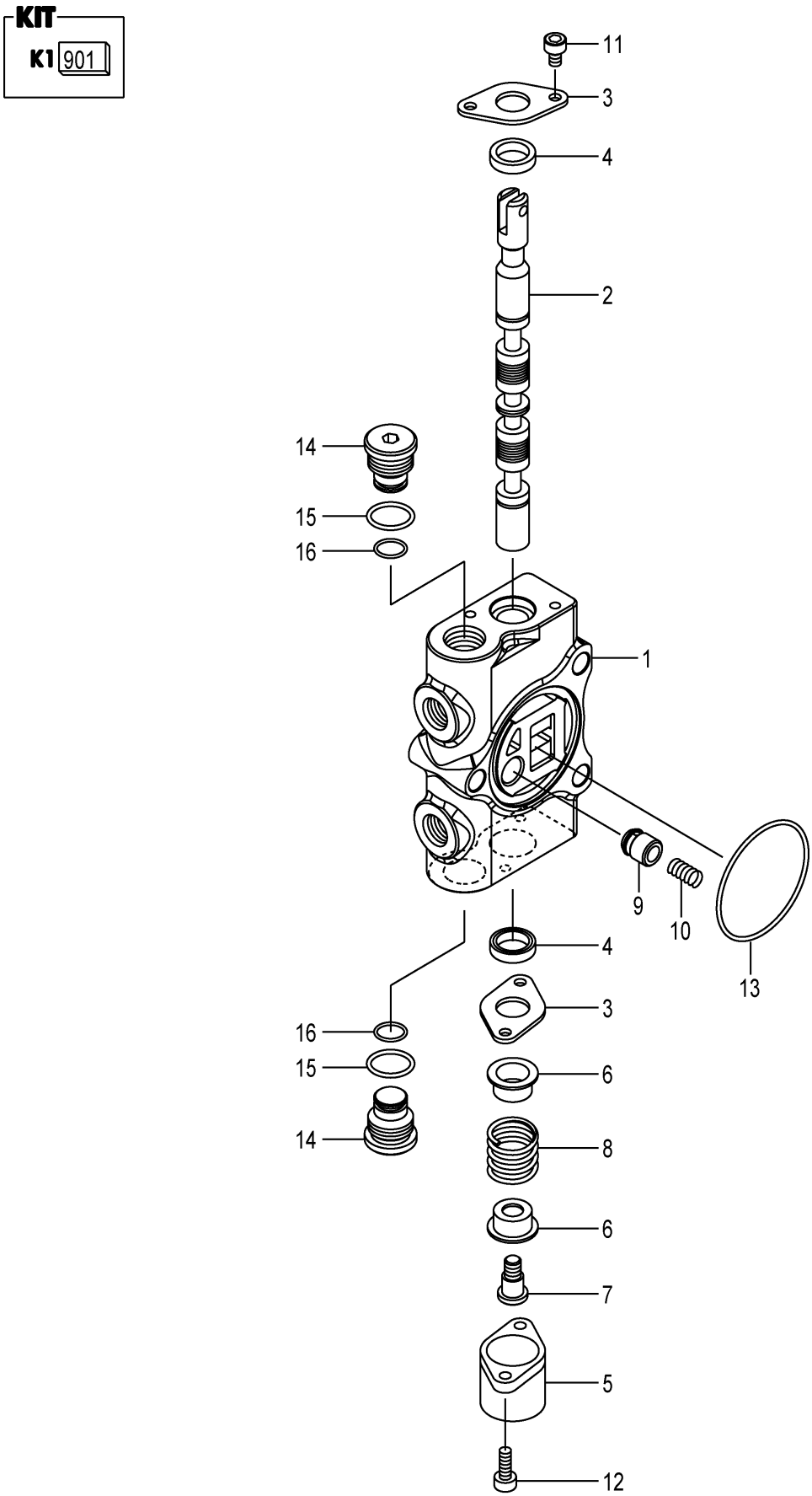

A:FD35T3S

Item No	Part No.	Mark	Description		Req'd	Remarks : Serial No.
A1	22N57-33041		SECTION-ASSY,VALVE	ﾊﾞﾙﾌﾞｾｸｼｮﾝｱｯｾﾝ	1	[3SV] INC.1-16
-	22N57-33041		SECTION-ASSY,VALVE	ﾊﾞﾙﾌﾞｾｸｼｮﾝｱｯｾﾝ	2	[4SV] INC.1-16
-	22N57-33041		SECTION-ASSY,VALVE	ﾊﾞﾙﾌﾞｾｸｼｮﾝｱｯｾﾝ	3	[5SV] INC.1-16
901	22N57-33081	K1	KIT,SEAL	ｼｰﾙｷｯﾄ	1	[3SV] INC.4,13,15,16
-	22N57-33081	K1	KIT,SEAL	ｼｰﾙｷｯﾄ	2	[4SV] INC.4,13,15,16
-	22N57-33081	K1	KIT,SEAL	ｼｰﾙｷｯﾄ	3	[5SV] INC.4,13,15,16
1	NO PART NO.	#	BODY	ﾎﾞﾃﾞｨ	1	[3SV]
-	NO PART NO.	#	BODY	ﾎﾞﾃﾞｨ	2	[4SV]
-	NO PART NO.	#	BODY	ﾎﾞﾃﾞｨ	3	[5SV]
2	NO PART NO.	#	SPOOL	ｽﾌﾟｰﾙ	1	[3SV]
-	NO PART NO.	#	SPOOL	ｽﾌﾟｰﾙ	2	[4SV]
-	NO PART NO.	#	SPOOL	ｽﾌﾟｰﾙ	3	[5SV]
3	22N57-33571		PLATE,SEAL	ﾌﾟﾚｰﾄ	2	[3SV]
-	22N57-33571		PLATE,SEAL	ﾌﾟﾚｰﾄ	4	[4SV]
-	22N57-33571		PLATE,SEAL	ﾌﾟﾚｰﾄ	6	[5SV]
4	22N57-33561	*	SEAL,DUST	ｼｰﾙ	2	[3SV]
-	22N57-33561	*	SEAL,DUST	ｼｰﾙ	4	[4SV]
-	22N57-33561	*	SEAL,DUST	ｼｰﾙ	6	[5SV]
5	22N57-33621		CAP	ｷｬｯﾌﾟ	1	[3SV]
-	22N57-33621		CAP	ｷｬｯﾌﾟ	2	[4SV]
-	22N57-33621		CAP	ｷｬｯﾌﾟ	3	[5SV]
6	22N57-33581		RETAINER,SPRING	ﾘﾃｰﾅ	2	[3SV]
-	22N57-33581		RETAINER,SPRING	ﾘﾃｰﾅ	4	[4SV]
-	22N57-33581		RETAINER,SPRING	ﾘﾃｰﾅ	6	[5SV]
7	22N57-33541		SCREW,SET	ｽｸﾘｭ	1	[3SV]
-	22N57-33541		SCREW,SET	ｽｸﾘｭ	2	[4SV]
-	22N57-33541		SCREW,SET	ｽｸﾘｭ	3	[5SV]
8	22N57-33591		SPRING,CENTER	ｽﾌﾟﾘﾝｸﾞ	1	[3SV]
-	22N57-33591		SPRING,CENTER	ｽﾌﾟﾘﾝｸﾞ	2	[4SV]
-	22N57-33591		SPRING,CENTER	ｽﾌﾟﾘﾝｸﾞ	3	[5SV]
9	NO PART NO.	#	POPPET,LOAD-CHECK	ﾎﾟﾍﾟｯﾄ	1	[3SV]
-	NO PART NO.	#	POPPET,LOAD-CHECK	ﾎﾟﾍﾟｯﾄ	2	[4SV]
-	NO PART NO.	#	POPPET,LOAD-CHECK	ﾎﾟﾍﾟｯﾄ	3	[5SV]
10	22N57-33671		SPRING,LOAD-CHECK	ｽﾌﾟﾘﾝｸﾞ	1	[3SV]
-	22N57-33671		SPRING,LOAD-CHECK	ｽﾌﾟﾘﾝｸﾞ	2	[4SV]
-	22N57-33671		SPRING,LOAD-CHECK	ｽﾌﾟﾘﾝｸﾞ	3	[5SV]
11	22N57-33631		BOLT	ﾎﾞﾙﾄ	2	[3SV]
-	22N57-33631		BOLT	ﾎﾞﾙﾄ	4	[4SV]
-	22N57-33631		BOLT	ﾎﾞﾙﾄ	6	[5SV]
12	22N57-33651		BOLT	ﾎﾞﾙﾄ	2	[3SV]
-	22N57-33651		BOLT	ﾎﾞﾙﾄ	4	[4SV]
-	22N57-33651		BOLT	ﾎﾞﾙﾄ	6	[5SV]
13	22N57-33751	*	O-RING	Oﾘﾝｸﾞ	1	[3SV]
-	22N57-33751	*	O-RING	Oﾘﾝｸﾞ	2	[4SV]
-	22N57-33751	*	O-RING	Oﾘﾝｸﾞ	3	[5SV]
A2	22N57-33641		PLUG-ASSY,SHUT-OFF	ｼｬｯﾄｵﾌﾌﾟﾗｸﾞｱｯｾﾝ	2	[3SV] INC.14-16
-	22N57-33641		PLUG-ASSY,SHUT-OFF	ｼｬｯﾄｵﾌﾌﾟﾗｸﾞｱｯｾﾝ	4	[4SV] INC.14-16
-	22N57-33641		PLUG-ASSY,SHUT-OFF	ｼｬｯﾄｵﾌﾌﾟﾗｸﾞｱｯｾﾝ	6	[5SV] INC.14-16
14	NO PART NO.	#	PLUG,SHUT-OFF	ﾌﾟﾗｸﾞ	2	[3SV]
-	NO PART NO.	#	PLUG,SHUT-OFF	ﾌﾟﾗｸﾞ	4	[4SV]

FIG.84 VALVE SECTION [3SV][4SV][5SV]

(F7C373Q0) ﾊﾞﾙﾌﾞｾｸｼｮﾝ

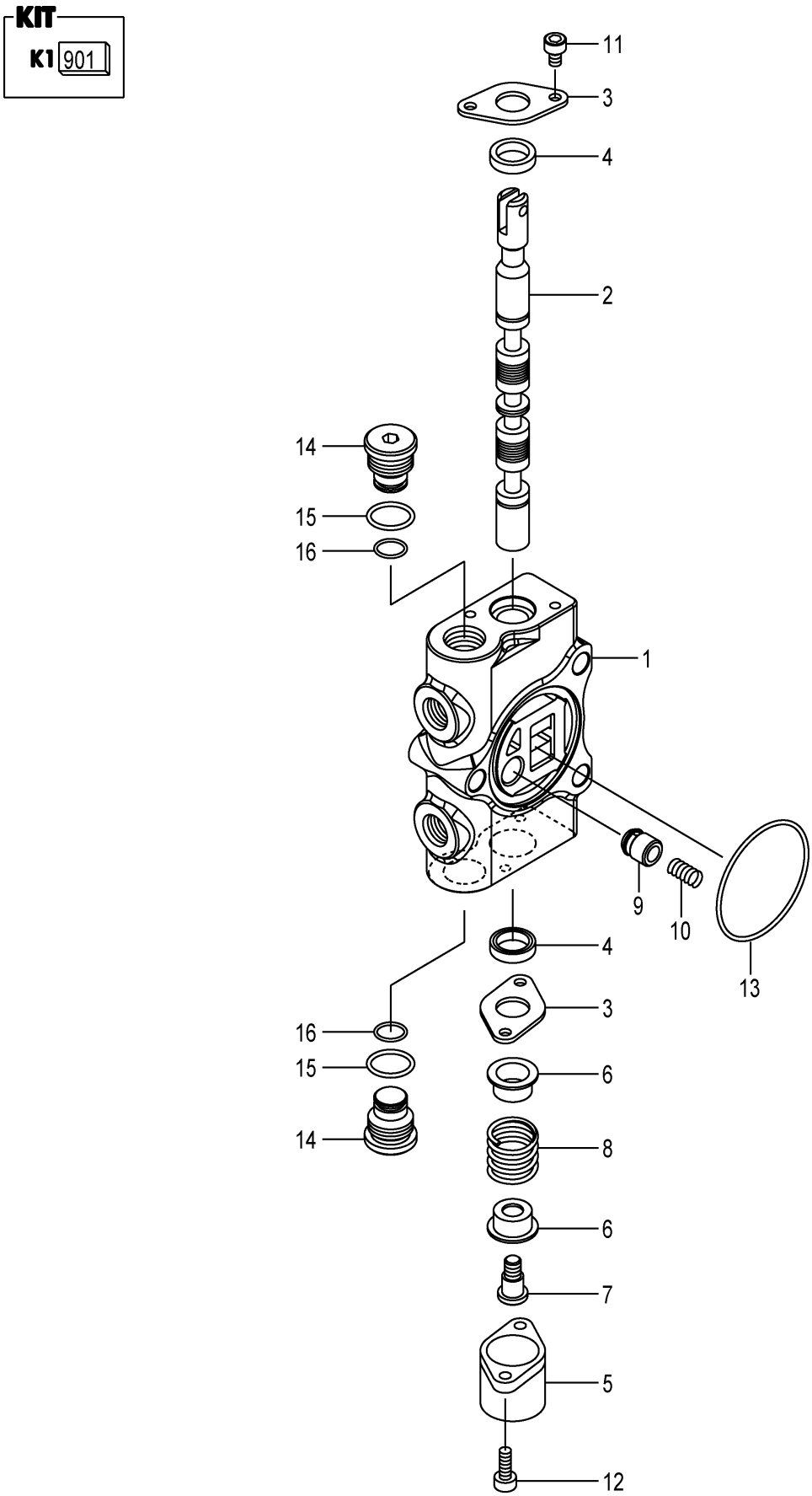

A:FD35T3S

Item No	Part No.	Mark	Description	Req'd	Remarks : Serial No.
-	NO PART NO.	#	PLUG,SHUT-OFF ﾌﾟﾗｸﾞ	6	[5SV]
15	22N57-33901	*	O-RING Oﾘﾝｸﾞ	2	[3SV]
-	22N57-33901	*	O-RING Oﾘﾝｸﾞ	4	[4SV]
-	22N57-33901	*	O-RING Oﾘﾝｸﾞ	6	[5SV]
16	22N57-33661	*	O-RING Oﾘﾝｸﾞ	2	[3SV]
-	22N57-33661	*	O-RING Oﾘﾝｸﾞ	4	[4SV]
-	22N57-33661	*	O-RING Oﾘﾝｸﾞ	6	[5SV]

FIG.85 HYDRAULIC LINE (MAIN)(1/4)

(F7C37630) ﾊｲﾄﾞﾛﾘｯｸﾗｲﾝ(ﾒｲﾝ)(1/4)

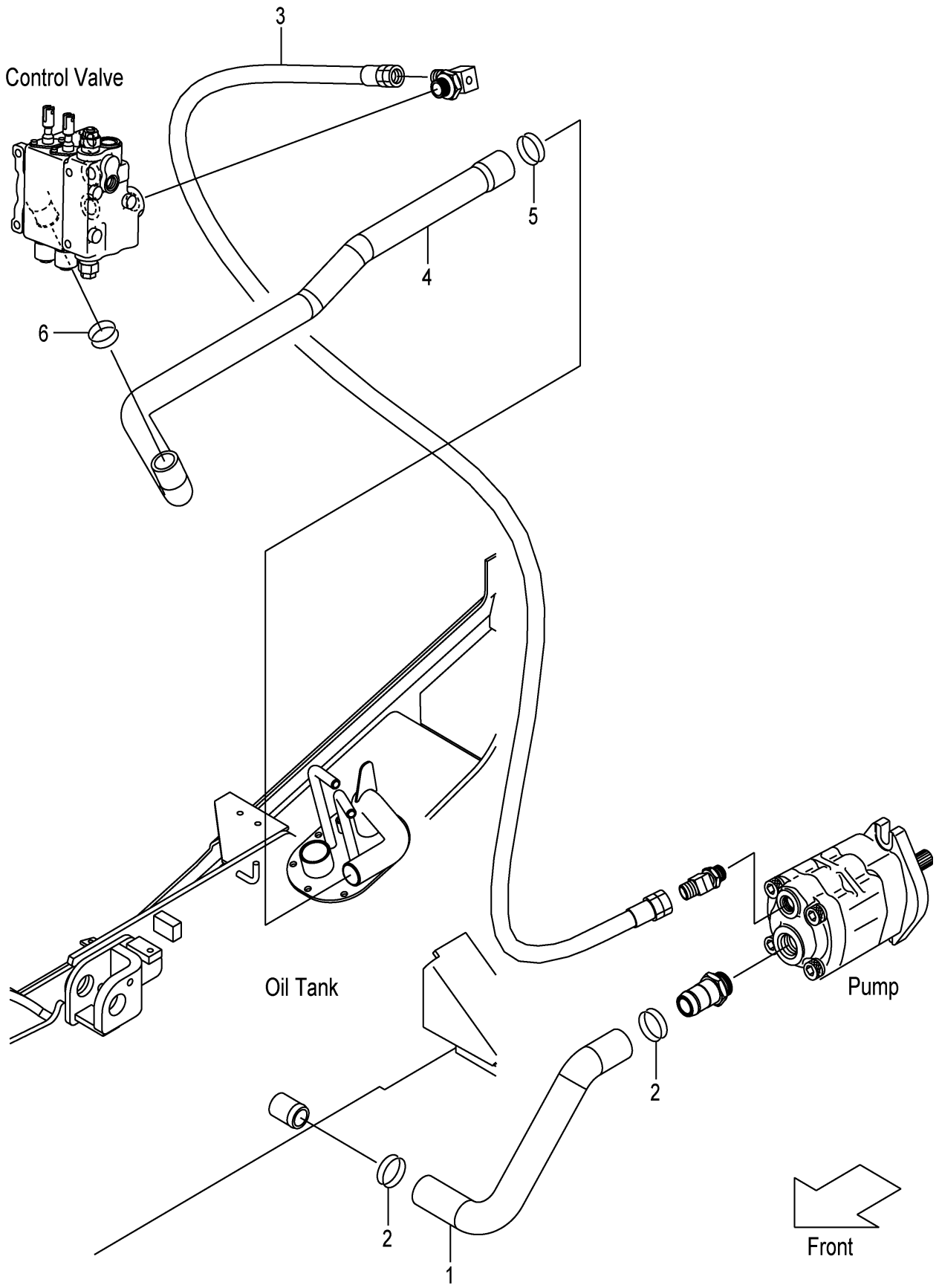

FIG.85

(F7C37630)

A:FD35T3S

Item No	Part No.	Mark	Description		Req'd	Remarks : Serial No.
1	22N57-62001		HOSE,SUCTION	ﾎｰｽ	1	
2	04911-00046		CLIP	ｸﾘｯﾌﾟ	2	
3	04691-04123		HOSE	ﾎｰｽ	1	
4	22N57-62101		HOSE,RETURN	ﾎｰｽ	1	
-	22N57-62201		HOSE,RETURN	ﾎｰｽ	1	[4SV][5SV]
5	04911-00042		CLIP	ｸﾘｯﾌﾟ	1	
6	04911-00040		CLIP	ｸﾘｯﾌﾟ	1	

FIG.86 HYDRAULIC LINE (MAIN)(2/4)

(F7C37650) ﾊｲﾄﾞﾛﾘｯｸﾗｲﾝ(ﾒｲﾝ)(2/4)

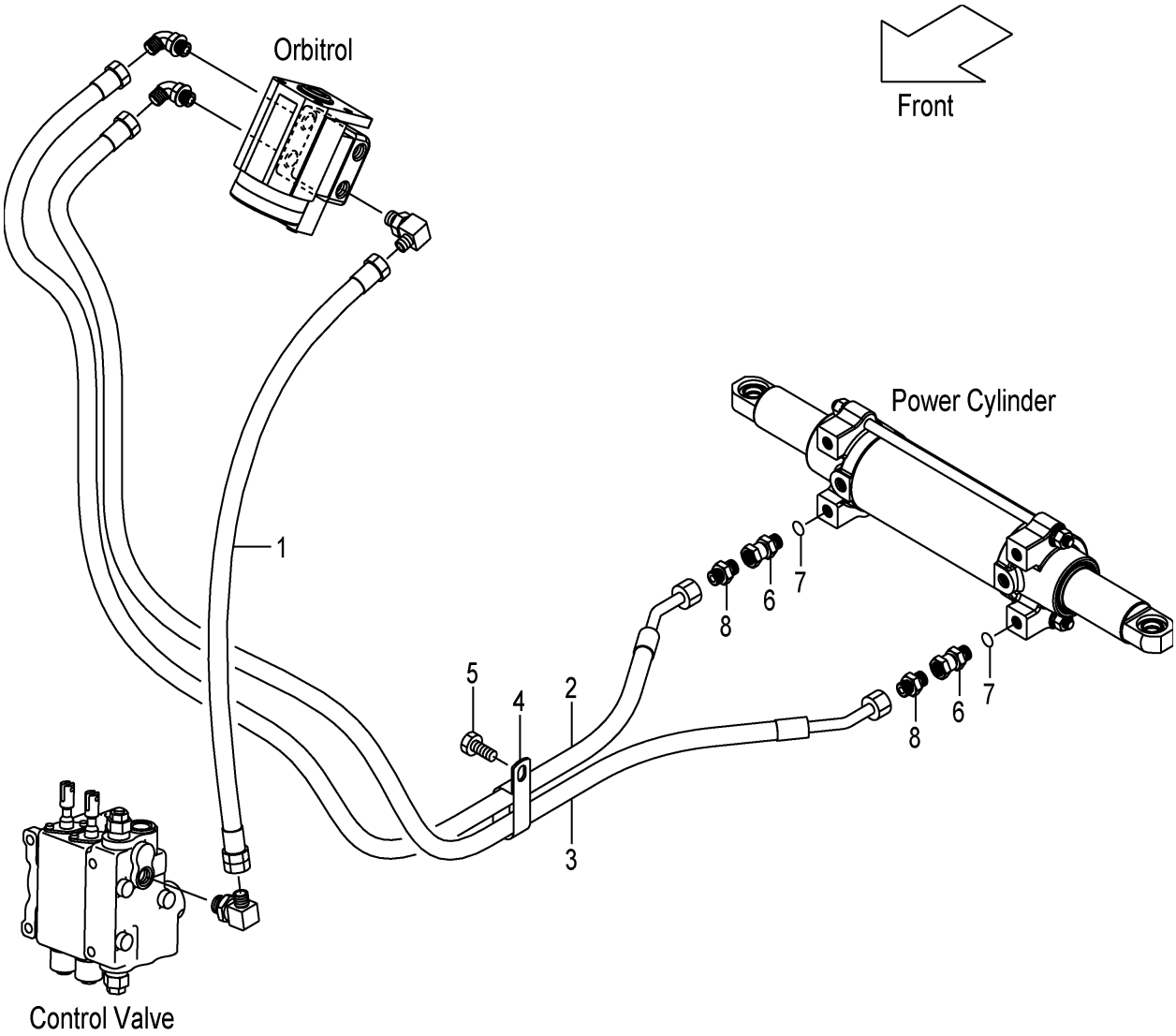

FIG.86

(F7C37650)

A:FD35T3S

Item No	Part No.	Mark	Description		Req'd	Remarks : Serial No.
1	04691-02038		HOSE	ﾎｰｽ	1	
2	22N97-62381		HOSE,PS,FRONT	ﾎｰｽ	1	
3	22N97-62391		HOSE,PS,FRONT	ﾎｰｽ	1	
4	26602-42221		CLIP	ｸﾘｯﾌﾟ	1	
5	01185-08016		BOLT	ﾎﾞﾙﾄ	1	
A1	04135-20303		UNION-ASSY	ﾕﾆｵﾝｱｯｾﾝ	2	INC.6,7
6	NO PART NO.	#	UNION	ﾕﾆｵﾝ	2	
7	03320-00140		O-RING	Oﾘﾝｸﾞ	2	
8	04133-00303		NIPPLE	ﾆｯﾌﾟﾙ	2	

FIG.87 HYDRAULIC LINE (MAIN)(3/4)

(F7C37660) ﾊｲﾄﾞﾛﾘｯｸﾗｲﾝ(ﾒｲﾝ)(3/4)

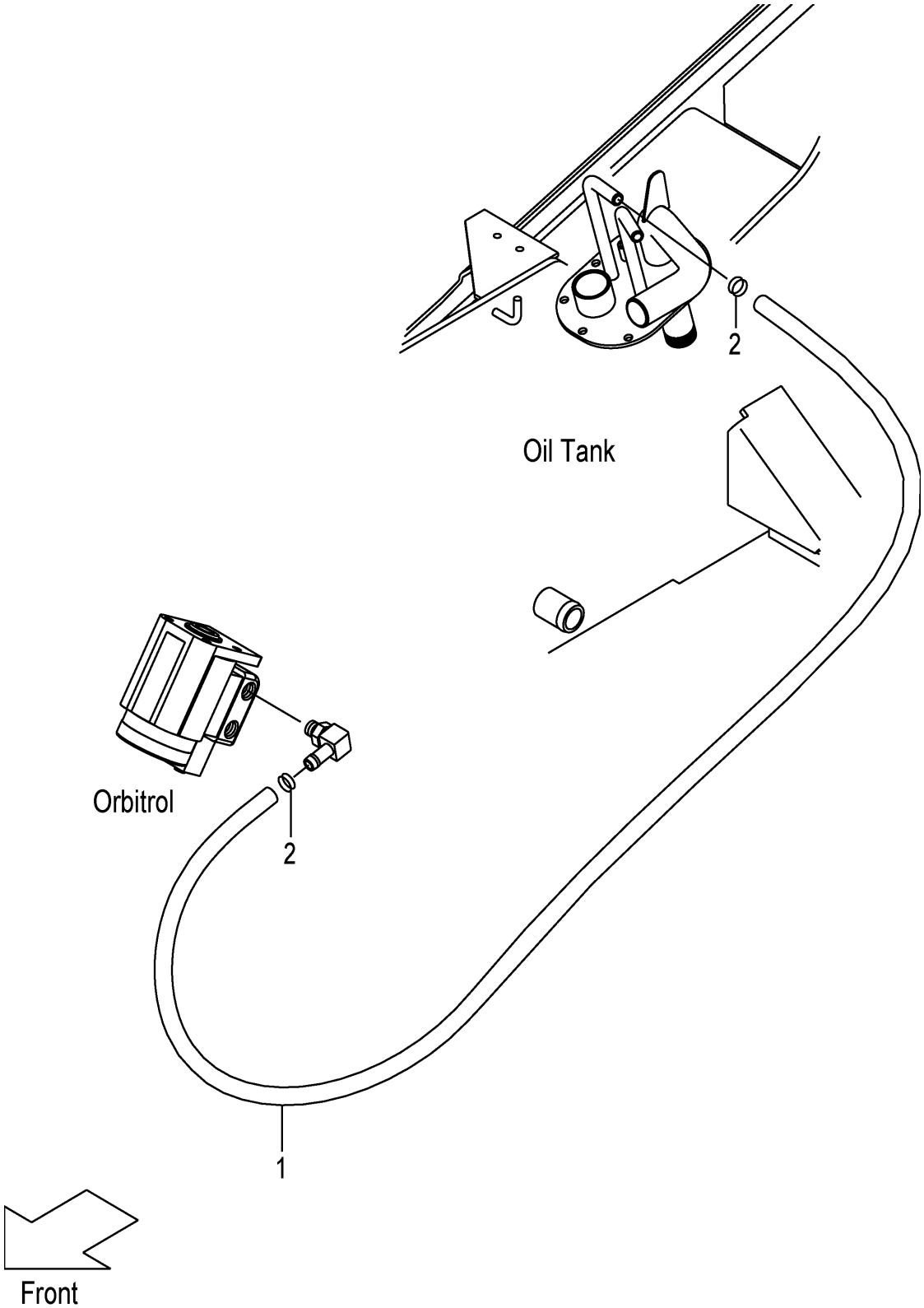

FIG.87

(F7C37660)

A:FD35T3S

Item No	Part No.	Mark	Description	Req'd	Remarks : Serial No.
1	04710-04190		HOSE ﾎｰｽ	1	
2	04911-00020		CLIP ｸﾘｯﾌﾟ	2	

FIG.88 HYDRAULIC LINE (MAIN)(4/4)

(F7C37690) ﾊｲﾄﾞﾛﾘｯｸﾗｲﾝ(ﾒｲﾝ)(4/4)

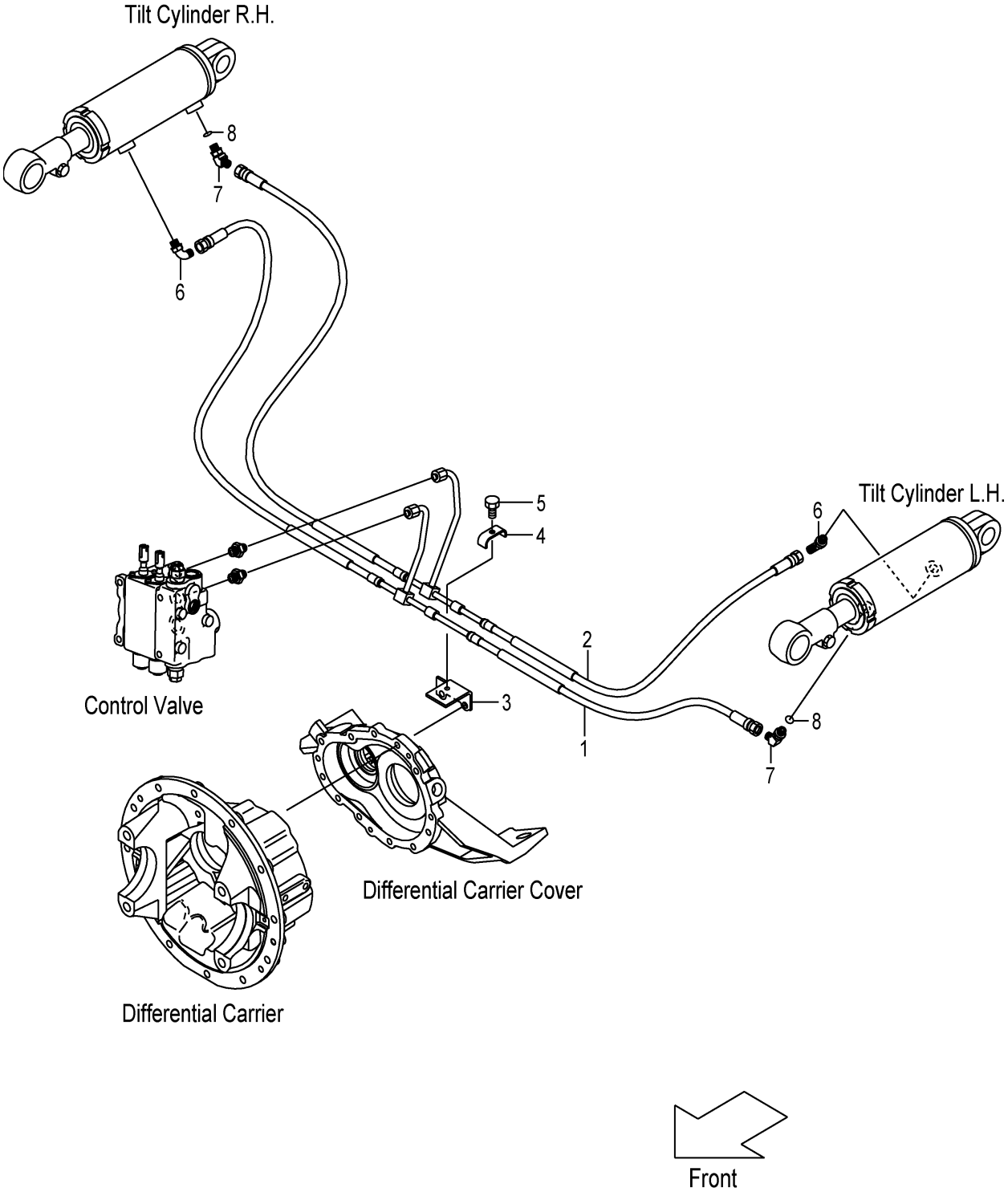

FIG.88

(F7C37690)

A:FD35T3S

Item No	Part No.	Mark	Description		Req'd	Remarks : Serial No.
1	22Y57-62401		HOSE,TILT,FRONT	ﾎｰｽ	1	
2	22Y57-62451		HOSE,TILT,REAR	ﾎｰｽ	1	
3	22N57-62531		BRACKET,TILT-PIPE	ﾌﾞﾗｹｯﾄ	1	
4	281E7-62041		CLIP,HOSE	ｸﾘｯﾌﾟ	1	
5	01183-08030		BOLT	ﾎﾞﾙﾄ	1	
6	22N57-62221		ELBOW	ｴﾙﾎﾞ	2	
A1	209M7-92921		ELBOW-ASSY	ｴﾙﾎﾞｱｯｾﾝ	2	INC.7,8
7	NO PART NO.	#	ELBOW	ｴﾙﾎﾞ	2	
8	03320-00110		O-RING	Oﾘﾝｸﾞ	2	

FIG.89 HYDRAULIC LINE

(F7C376B0) ﾊｲﾄﾞﾛﾘｯｸﾗｲﾝ(ﾄﾙｺﾝ)

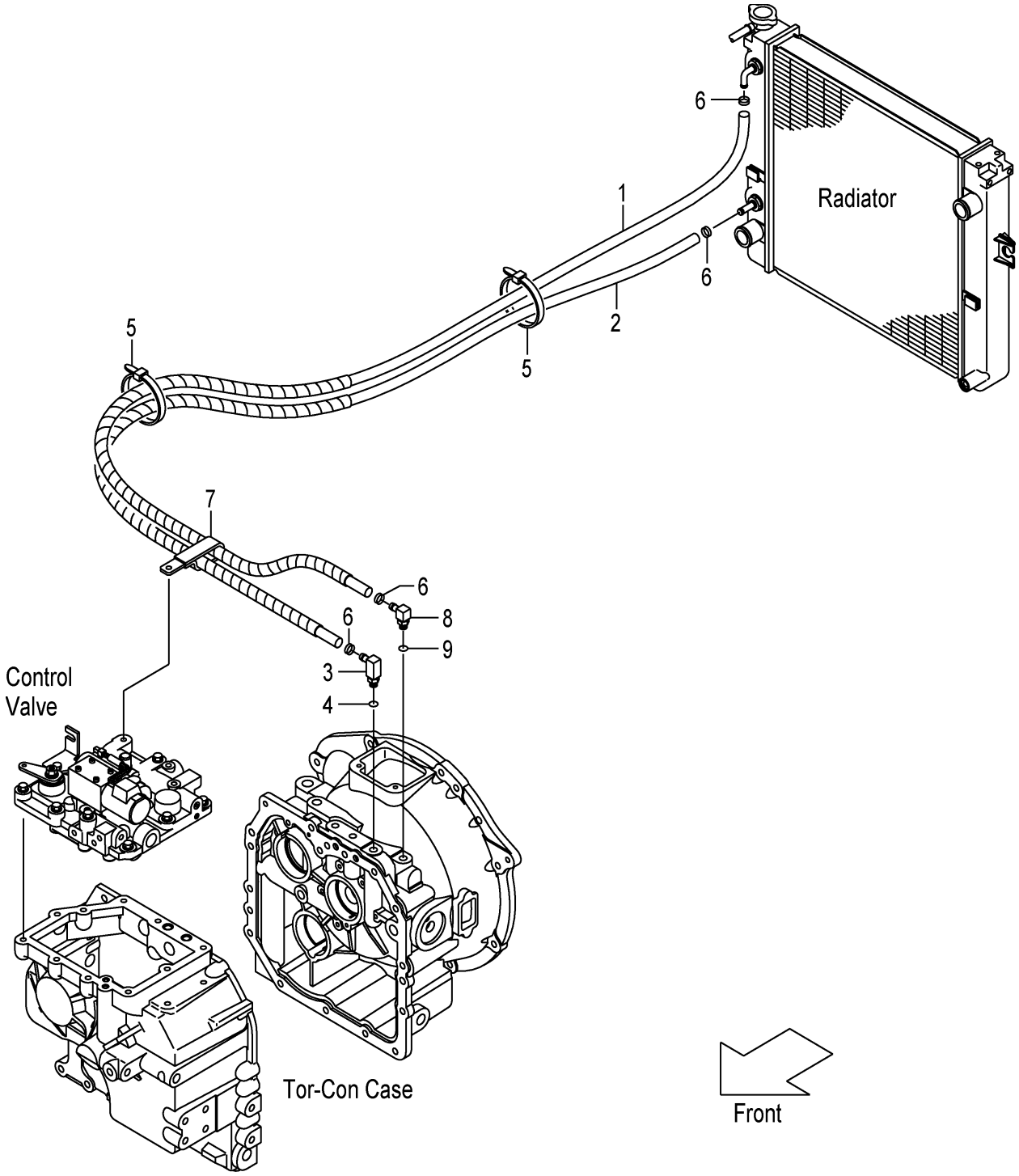

A:FD35T3S

Item No	Part No.	Mark	Description		Req'd	Remarks : Serial No.
1	22N57-82111		HOSE,OIL-COOLER	ﾎｰｽ	1	
2	22N57-82101		HOSE,OIL-COOLER	ﾎｰｽ	1	
A1	22N57-80201		FITTING-ASSY,HOSE	ﾎｰｽﾌｨｯﾃｨﾝｸﾞｱｯｾﾝ	1	INC.3,4
3	NO PART NO.	#	FITTING,HOSE	ﾌｨｯﾃｨﾝｸﾞ	1	
4	03320-00140		O-RING	Oﾘﾝｸﾞ	1	
5	27042-42322		BAND	ﾊﾞﾝﾄﾞ	2	
6	04911-00023		CLIP	ｸﾘｯﾌﾟ	4	
7	209P7-62531		CLIP,HOSE	ｸﾘｯﾌﾟ	1	
A2	22N57-80301		FITTING-ASSY,HOSE	ﾎｰｽﾌｨｯﾃｨﾝｸﾞｱｯｾﾝ	1	INC.8,9
8	NO PART NO.	#	FITTING,HOSE	ﾌｨｯﾃｨﾝｸﾞ	1	
9	03320-00140		O-RING	Oﾘﾝｸﾞ	1	

FIG.90 TILT CYLINDER

(F7C38510) ﾃｨﾙﾄｼﾘﾝﾀﾞ

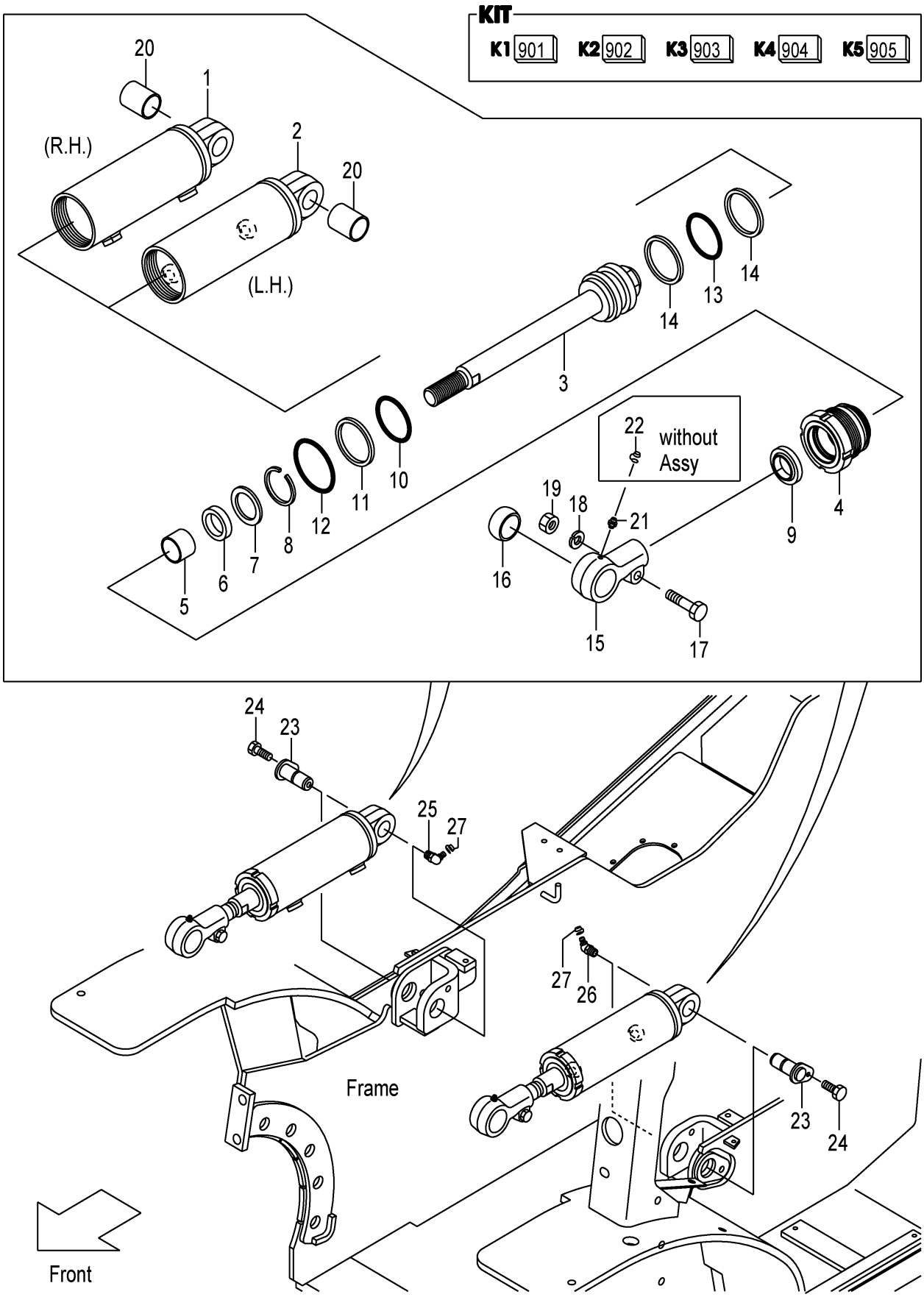

A:FD35T3S

Item No	Part No.	Mark	Description		Req'd	Remarks : Serial No.
A1	22Y58-50101		CYL-ASSY,TILT,RH	ﾃｨﾙﾄｼﾘﾝﾀﾞｱｯｾﾝ	1	(6-12 DEG.) INC.1,3-21
A2	22Y58-50201		CYL-ASSY,TILT,LH	ﾃｨﾙﾄｼﾘﾝﾀﾞｱｯｾﾝ	1	(6-12 DEG.) INC.2-21
901	22N58-52921	K1	KIT,REPAIR,CYL	ｼﾘﾝﾀﾞﾘﾍﾟｱｷｯﾄ	2	INC.6,9-14
902	22N58-52901	K2	KIT,CYL-BODY,RH	ｼﾘﾝﾀﾞﾎﾞﾃﾞｨｷｯﾄ	1	INC.1,20
903	22N58-52911	K3	KIT,CYL-BODY,LH	ｼﾘﾝﾀﾞﾎﾞﾃﾞｨｷｯﾄ	1	INC.2,20
904	22N58-52931	K4	KIT,ROD-HEAD	ﾛｯﾄﾞﾍｯﾄﾞｷｯﾄ	2	INC.15,16
905	22N58-52941	K5	KIT,CYL-HEAD	ｼﾘﾝﾀﾞﾍｯﾄﾞｷｯﾄ	2	INC.4,5
1	NO PART NO.	#*	BODY,CYL,RH	ﾎﾞﾃﾞｨ	1	
2	NO PART NO.	#*	BODY,CYL,LH	ﾎﾞﾃﾞｨ	1	
3	22Y58-52801		ROD,PISTON	ﾛｯﾄﾞ	2	
4	NO PART NO.	#*	HEAD,CYL	ﾍｯﾄﾞ	2	
5	NO PART NO.	#*	BUSHING	ﾌﾞｯｼﾝｸﾞ	2	
6	NO PART NO.	#*	U-RING	Uﾘﾝｸﾞ	2	
7	22N58-52811		SPACER	ｽﾍﾟｰｻ	2	
8	22N58-52821		RING,SNAP	ﾘﾝｸﾞ	2	
9	NO PART NO.	#*	RING,WIPER	ﾘﾝｸﾞ	2	
10	NO PART NO.	#*	O-RING	Oﾘﾝｸﾞ	2	
11	NO PART NO.	#*	RING,BACK-UP	ﾘﾝｸﾞ	2	
12	NO PART NO.	#*	O-RING	Oﾘﾝｸﾞ	2	
13	NO PART NO.	#*	O-RING	Oﾘﾝｸﾞ	2	
14	NO PART NO.	#*	RING,BACK-UP	ﾘﾝｸﾞ	4	
15	NO PART NO.	#*	HEAD,ROD	ﾍｯﾄﾞ	2	
16	NO PART NO.	#*	BUSHING,PIN	ﾌﾞｯｼﾝｸﾞ	2	
17	22N58-52831		BOLT	ﾎﾞﾙﾄ	2	
18	22N58-52841		WASHER	ﾜｯｼｬ	2	
19	22N58-52851		NUT	ﾅｯﾄ	2	
20	NO PART NO.	#*	BUSHING,PIN	ﾌﾞｯｼﾝｸﾞ	2	
21	22N58-52861		NIPPLE,GREASE	ﾆｯﾌﾟﾙ	2	
22	22199-12401		CAP,NIPPLE	ｷｬｯﾌﾟ	2	
23	22N58-52301		PIN	ﾋﾟﾝ	2	
24	01186-10016		BOLT	ﾎﾞﾙﾄ	2	
25	04901-00160		FITTING	ﾌｨｯﾃｨﾝｸﾞ	1	
26	22N58-52201		FITTING	ﾌｨｯﾃｨﾝｸﾞ	1	
27	22199-12401		CAP,NIPPLE	ｷｬｯﾌﾟ	2	

FIG.91 DECAL (1/2)

(F7C39110) ﾃﾞｶﾙ(1/2)

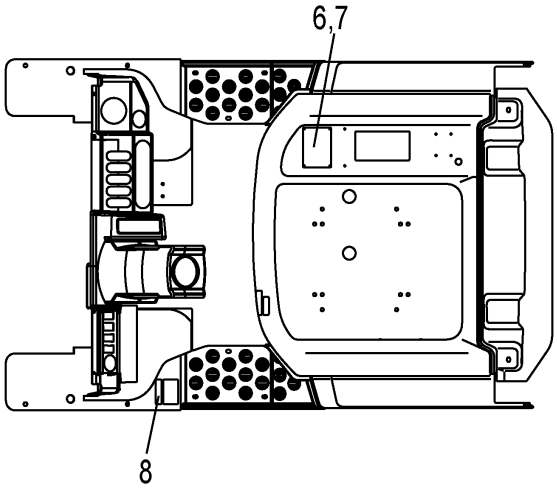

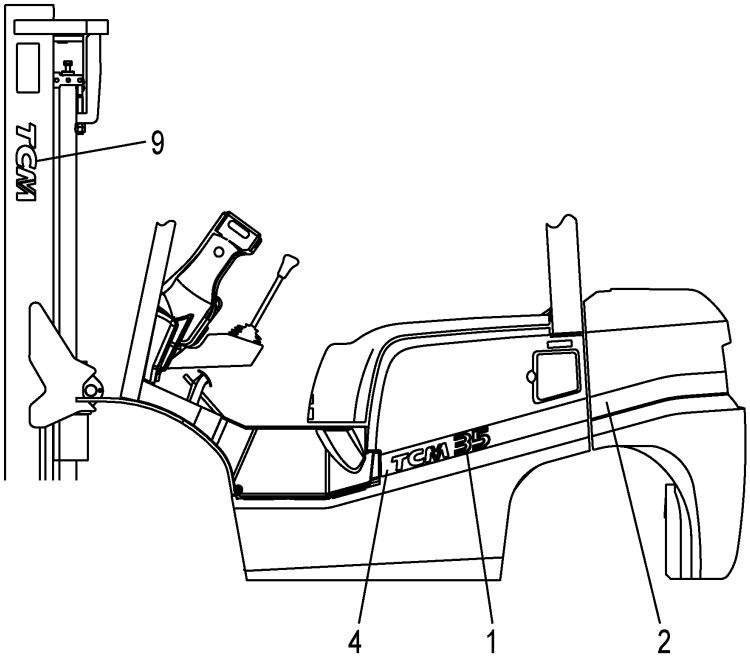

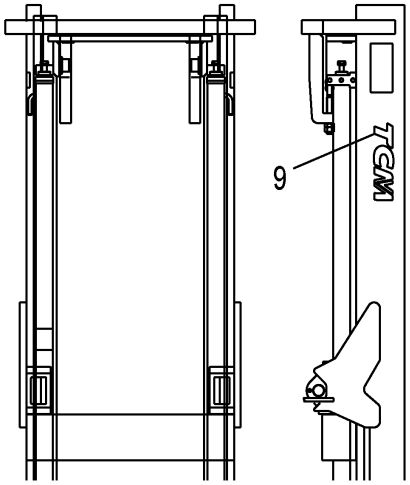

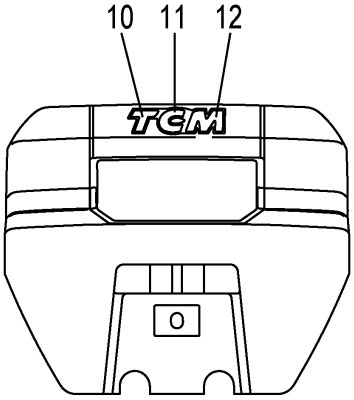

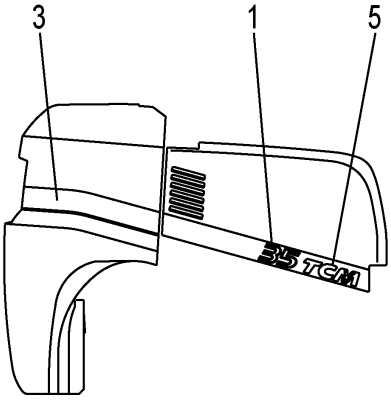

A:FD35T3S

Item No	Part No.	Mark	Description		Req'd	Remarks : Serial No.
901	C-11452-2Y5-D	K1	KIT,DECAL,JPN	ﾃﾞｶﾙｷｯﾄ	1	INC.8,9,FIG.92:3-16
1	22Y59-12281		DECAL,MODEL-MARK,35	ﾃﾞｶﾙ	2	
2	22Y59-12151		LINE,WEIGHT,LH	ﾗｲﾝ	1	
-	22Y59-12171		LINE,WEIGHT,LH	ﾗｲﾝ	1	[ATF]
3	22Y59-12161		LINE,WEIGHT,RH	ﾗｲﾝ	1	
-	22Y59-12181		LINE,WEIGHT,RH	ﾗｲﾝ	1	[ATF]
4	22N59-12101		LINE,COVER,LH	ﾗｲﾝ	1	
5	22N59-12111		LINE,COVER,RH	ﾗｲﾝ	1	
6	22Y59-12601		CHART,CAPACITY,3.5T	ﾁｬｰﾄ	1	(VM200-500)
-	22Y59-12011		CHART,CAPACITY,3.5T	ﾁｬｰﾄ	1	(VM550)
-	22Y59-12021		CHART,CAPACITY,3.5T	ﾁｬｰﾄ	1	(VM600)
7	02432-01008		RIVET	ﾘﾍﾞｯﾄ	4	
8	22Y59-12101	*	DECAL,AIR-PRESSURE	ﾃﾞｶﾙ	1	
9	273A9-12242	*	DECAL,TCM	ﾃﾞｶﾙ	2	
10	22N59-12041		DECAL,B/WEIGHT,T	ﾃﾞｶﾙ	1	
11	22N59-12051		DECAL,B/WEIGHT,C	ﾃﾞｶﾙ	1	
12	22N59-12061		DECAL,B/WEIGHT,M	ﾃﾞｶﾙ	1	

FIG.92 DECAL (2/2)

(F7C39120) ﾃﾞｶﾙ(2/2)

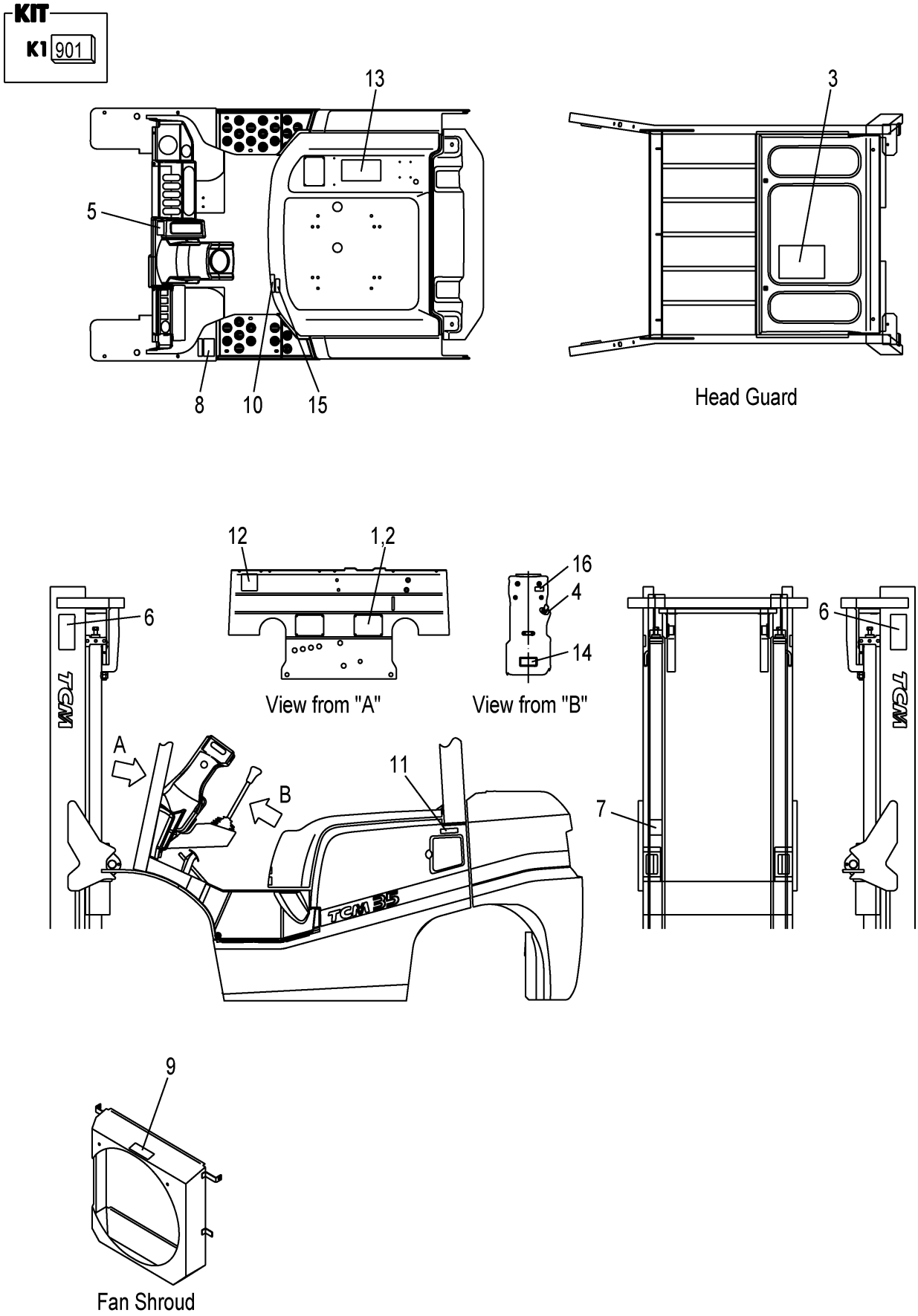

A:FD35T3S

Item No	Part No.	Mark	Description		Req'd	Remarks : Serial No.
901	C-11452-2Y5-D	K1	KIT,DECAL,JPN	ﾃﾞｶﾙｷｯﾄ	1	INC.3-16,FIG.91:8,9
1	NO PART NO.	#	PLATE,NAME	ﾌﾟﾚｰﾄ	1	
2	216G9-12131		RIVET	ﾘﾍﾞｯﾄ	4	
3	22N59-12261	*	DECAL,LUBRICATION	ﾃﾞｶﾙ	1	
4	216G9-12071	*	DECAL,STARTER-SWITCH	ﾃﾞｶﾙ	1	
5	214A5-53012	*	DECAL,BRAKE-LEVER	ﾃﾞｶﾙ	1	
6	27419-12062	*	DECAL,MAST-CAUTION	ﾃﾞｶﾙ	2	
7	27419-12072	*	DECAL,CROSS-BEAM	ﾃﾞｶﾙ	1	
8	216G9-12062	*	DECAL,TIRE-CAUTION	ﾃﾞｶﾙ	1	
9	216G9-12052	*	DECAL,FAN-CAUTION	ﾃﾞｶﾙ	1	
10	239A9-12071	*	DECAL,FUEL-CAPACITY	ﾃﾞｶﾙ	1	
11	239A9-12051	*	DECAL,LIGHT-OIL	ﾃﾞｶﾙ	1	
12	271A9-12251	*	DECAL,CAUTION	ﾃﾞｶﾙ	1	
13	239A9-12301	*	DECAL,WARNING-PLATE	ﾃﾞｶﾙ	1	
14	26519-12281	*	DECAL,HOSE	ﾃﾞｶﾙ	1	
15	22N59-12351	*	DECAL,BONNET-CAUTION	ﾃﾞｶﾙ	1	
16	214A2-42141	*	DECAL,TURN-SIGNAL	ﾃﾞｶﾙ	1	

FIG.93 FORK [VM2Y5]

(M7038110) フォーク

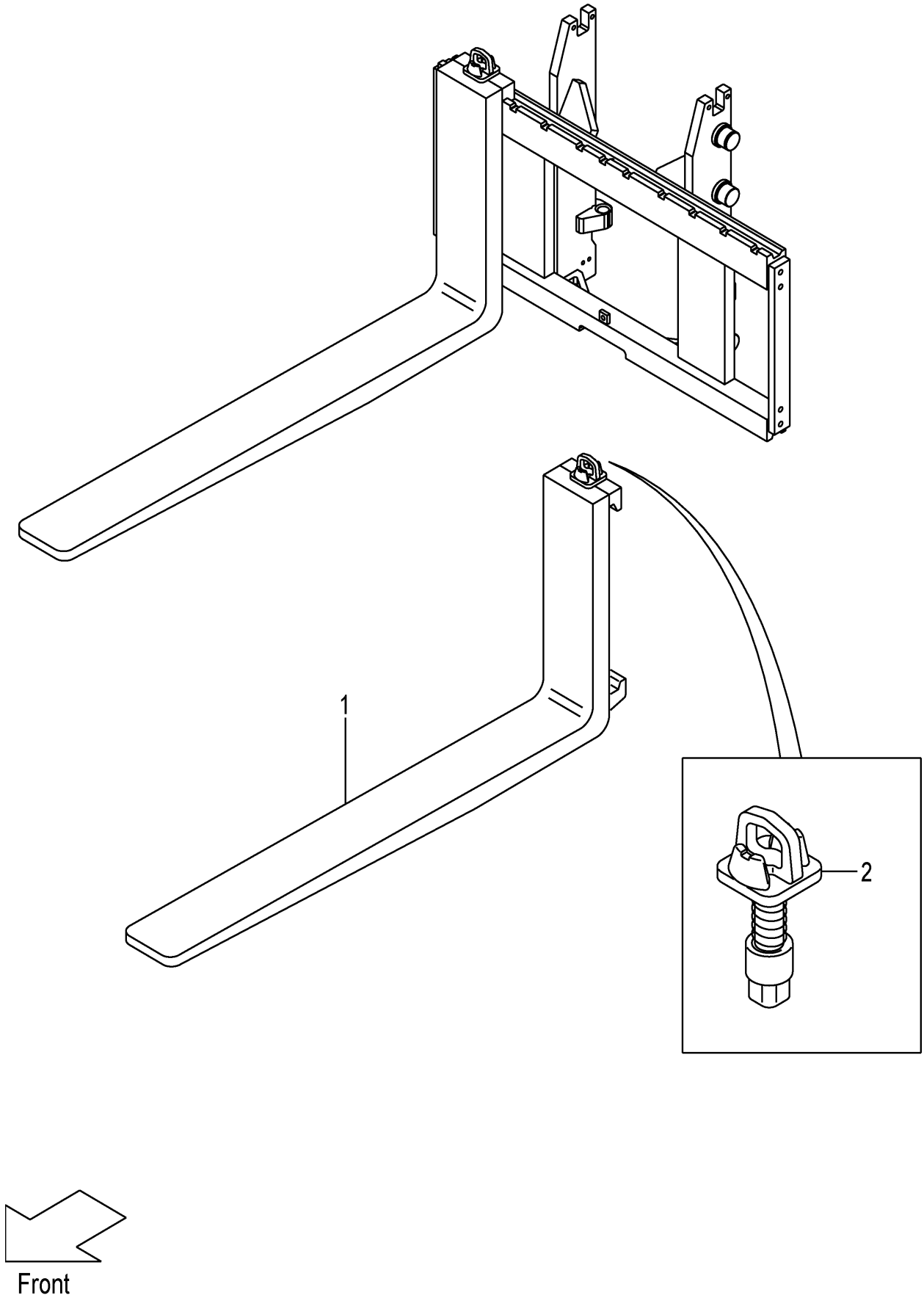

A:VM2Y5

Item No	Part No.	Mark	Description		Req'd	Remarks : Serial No.
1	24328-10514		FORK	ﾌｫｰｸ	2	(L=1070) INC.6
-	24328-10503		FORK	ﾌｫｰｸ	2	[LF100] INC.6
-	24328-10514		FORK	ﾌｫｰｸ	2	[LF107] INC.6
-	24328-10523		FORK	ﾌｫｰｸ	2	[LF110] INC.2
-	24328-10533		FORK	ﾌｫｰｸ	2	[LF120] INC.2
-	24328-10544		FORK	ﾌｫｰｸ	2	[LF122] INC.2
-	24328-12304		FORK	ﾌｫｰｸ	2	[LF130] INC.2
-	24328-10554		FORK	ﾌｫｰｸ	2	[LF137] INC.2
-	24328-12314		FORK	ﾌｫｰｸ	2	[LF140] INC.2
-	24328-12324		FORK	ﾌｫｰｸ	2	[LF150] INC.2
-	24328-10564		FORK	ﾌｫｰｸ	2	[LF152] INC.2
-	24328-12334		FORK	ﾌｫｰｸ	2	[LF160] INC.2
-	24328-10574		FORK	ﾌｫｰｸ	2	[LF167] INC.2
-	24328-12344		FORK	ﾌｫｰｸ	2	[LF170] INC.2
-	24328-12354		FORK	ﾌｫｰｸ	2	[LF180] INC.2
-	24328-10584		FORK	ﾌｫｰｸ	2	[LF182] INC.2
-	24328-12364		FORK	ﾌｫｰｸ	2	[LF190] INC.2
-	24328-10594		FORK	ﾌｫｰｸ	2	[LF197] INC.2
-	24328-12374		FORK	ﾌｫｰｸ	2	[LF200] INC.2
-	24328-12384		FORK	ﾌｫｰｸ	2	[LF210] INC.2
-	24328-10604		FORK	ﾌｫｰｸ	2	[LF212] INC.2
2	214J8-11002		STOPPER,FORK	ｽﾄｯﾊﾟ	2	

FIG.94 LIFT BRACKET [VM2Y5]

(M7038210) ﾘﾌﾄﾌﾞﾗｹｯﾄ

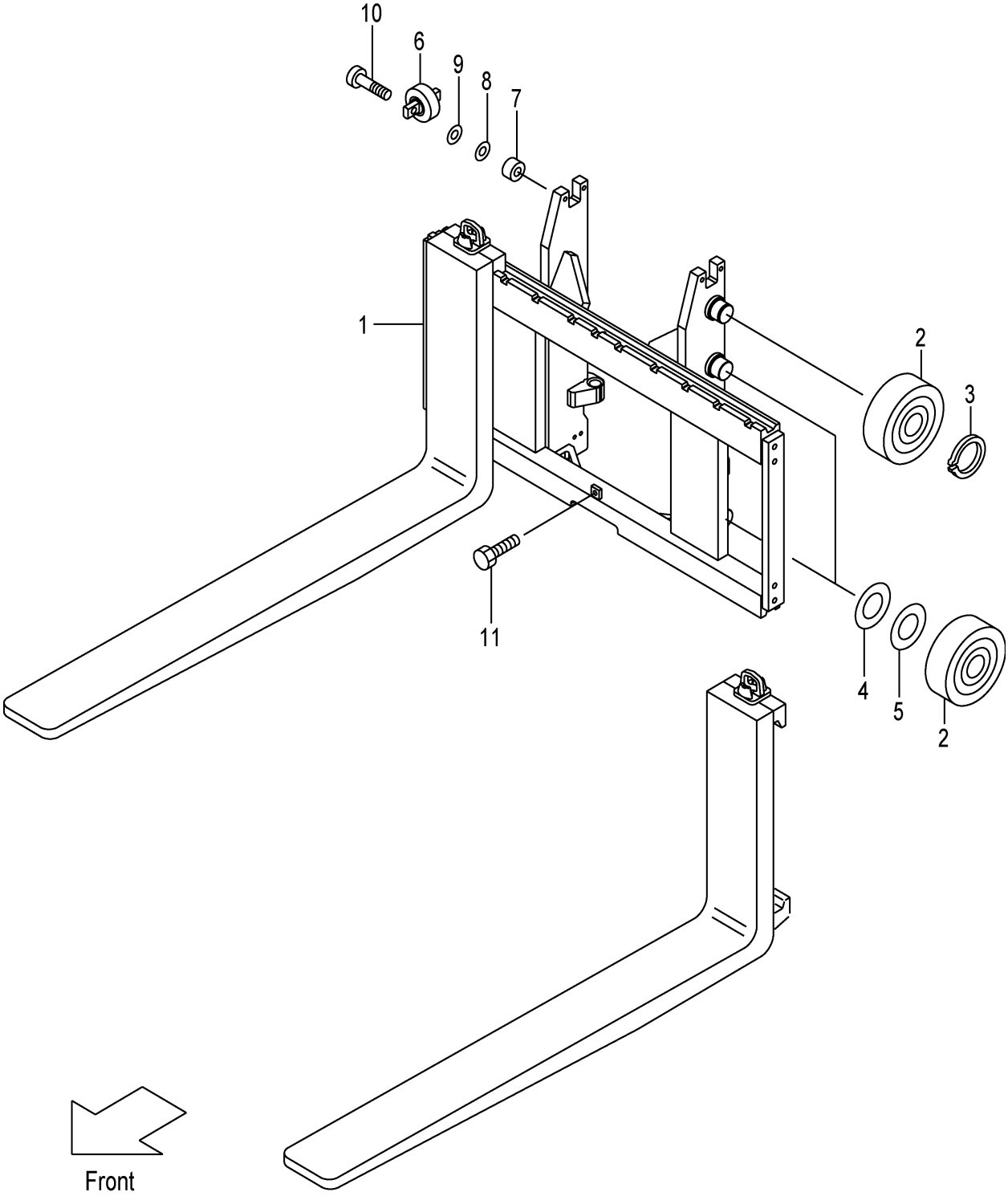

FIG.94

(M7038210)

A:VM2Y5

Item No	Part No.	Mark	Description		Req'd	Remarks : Serial No.
1	22Y58-20201		BRACKET,LIFT	ﾌﾞﾗｹｯﾄ	1	
2	277P8-22051		ROLLER,END,119.0	ﾛｰﾗ	6	
-	277P8-22061		ROLLER,END,119.5	ﾛｰﾗ	(6)	
3	02100-00045		RING,SNAP	ﾘﾝｸﾞ	2	
4	277P8-22071		SHIM,T-0.5	ｼﾑ	5	
5	277P8-22081		SHIM,T-1.0	ｼﾑ	5	
6	22N58-32701		ROLLER,SIDE	ﾛｰﾗ	2	
7	22N58-32711		SPACER	ｽﾍﾟｰｻ	4	
8	22018-30261		SHIM,T-0.2	ｼﾑ	4	
9	22018-30121		SHIM,T-1.0	ｼﾑ	4	
10	01103-10045		BOLT	ﾎﾞﾙﾄ	4	
11	01184-12025		BOLT & WASHER	ﾎﾞﾙﾄ&ﾜｯｼｬ	1	

FIG.95 BACKREST [VM2Y5]

(M7038220) ﾊﾞｯｸﾚｽﾄ

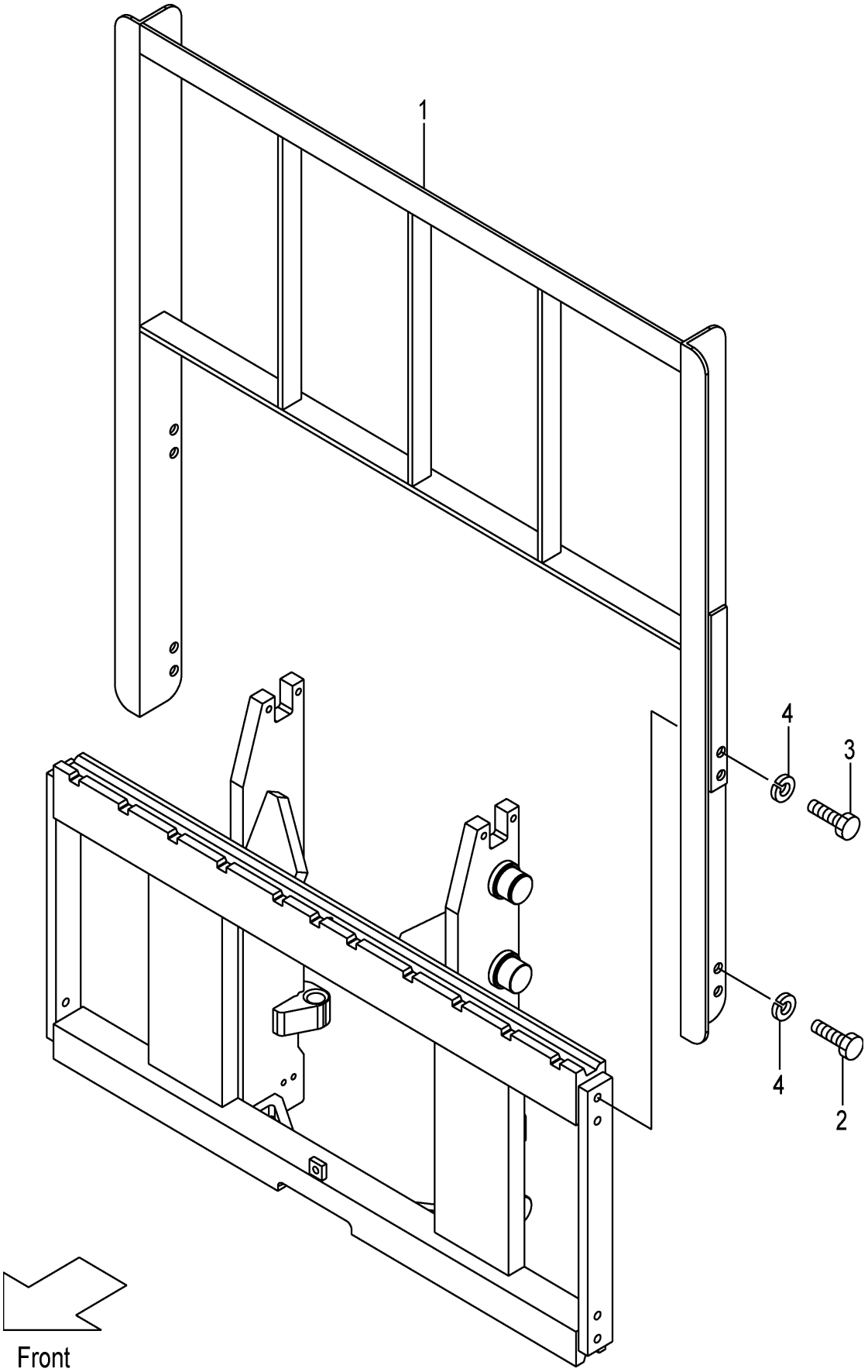

FIG.95
(M7038220)

A:VM2Y5

Item No	Part No.	Mark	Description		Req'd	Remarks : Serial No.
1	234F8-22201		BACKREST	ﾊﾞｯｸﾚｽﾄ	1	
2	01100-14025		BOLT	ﾎﾞﾙﾄ	4	
3	01100-14030		BOLT	ﾎﾞﾙﾄ	4	
4	02010-00014		WASHER	ﾜｯｼｬ	8	

FIG.96 MAST [VM2Y5]

(M7038310) マスト

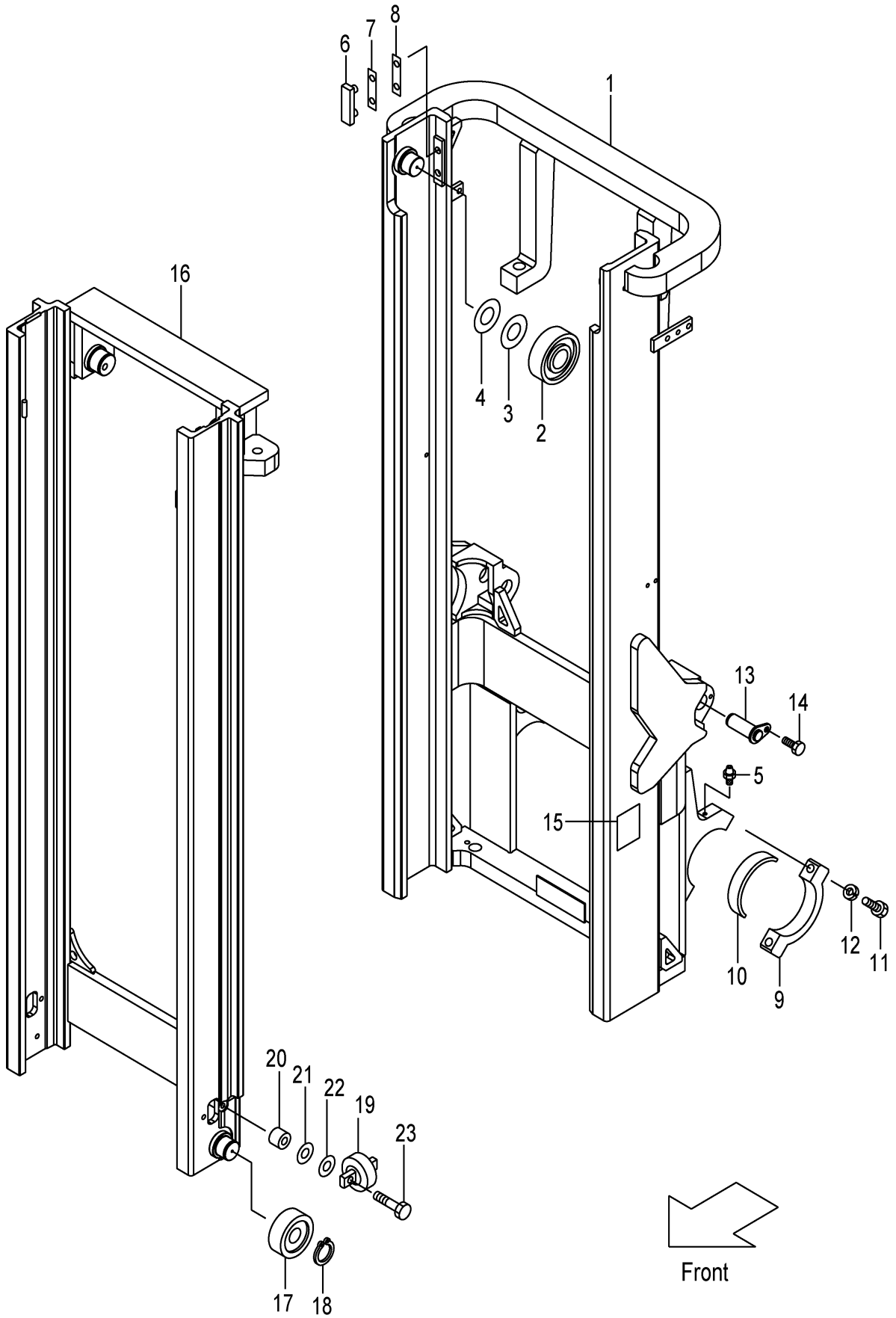

A:VM2Y5

Item No	Part No.	Mark	Description		Req'd	Remarks : Serial No.
1	22Y58-30211		MAST,OUTER VM200	ﾏｽﾄ	1	
-	22Y58-30221		MAST,OUTER VM225	ﾏｽﾄ	1	
-	22Y58-30231		MAST,OUTER VM250	ﾏｽﾄ	1	
-	22Y58-30241		MAST,OUTER VM270	ﾏｽﾄ	1	
-	22Y58-30251		MAST,OUTER VM275	ﾏｽﾄ	1	
-	22Y58-30201		MAST,OUTER VM300	ﾏｽﾄ	1	
-	22Y58-30261		MAST,OUTER VM325	ﾏｽﾄ	1	
-	22Y58-30271		MAST,OUTER VM330	ﾏｽﾄ	1	
-	22Y58-30281		MAST,OUTER VM350	ﾏｽﾄ	1	
-	22Y58-30291		MAST,OUTER VM366	ﾏｽﾄ	1	
-	22Y58-30301		MAST,OUTER VM370	ﾏｽﾄ	1	
-	22Y58-30311		MAST,OUTER VM375	ﾏｽﾄ	1	
-	22Y58-30321		MAST,OUTER VM400	ﾏｽﾄ	1	
-	22Y58-30331		MAST,OUTER VM425	ﾏｽﾄ	1	
-	22Y58-30341		MAST,OUTER VM450	ﾏｽﾄ	1	
-	22Y58-30351		MAST,OUTER VM475	ﾏｽﾄ	1	
-	22Y58-30361		MAST,OUTER VM500	ﾏｽﾄ	1	
-	22Y58-30371		MAST,OUTER VM550	ﾏｽﾄ	1	
-	22Y58-30381		MAST,OUTER VM600	ﾏｽﾄ	1	
2	277P8-22051		ROLLER,END,119.0	ﾛｰﾗ	2	
3	277P8-22071		SHIM,T-0.5	ｼﾑ	12	
4	277P8-22081		SHIM,T-1.0	ｼﾑ	12	
5	04901-00100		FITTING	ﾌｨｯﾃｨﾝｸﾞ	2	
6	22Y58-33361		SLIPPER	ｽﾘｯﾊﾟ	2	
7	216G8-33361		SHIM,T-0.5	ｼﾑ	20	
8	216G8-33371		SHIM,T-1.0	ｼﾑ	10	
9	277P8-32701		CAP	ｷｬｯﾌﾟ	2	
10	214A8-02201		BUSHING	ﾌﾞｯｼﾝｸﾞ	2	
11	01103-16065		BOLT	ﾎﾞﾙﾄ	4	
12	02011-00016		WASHER	ﾜｯｼｬ	4	
13	22N58-52501		PIN	ﾋﾟﾝ	2	
14	216G8-52301		BOLT & WASHER	ﾎﾞﾙﾄ&ﾜｯｼｬ	2	
15	23678-06002		PLATE,NAME	ﾌﾟﾚｰﾄ	1	
16	22Y58-30411		MAST,INNER VM200	ﾏｽﾄ	1	
-	22Y58-30421		MAST,INNER VM225	ﾏｽﾄ	1	
-	22Y58-30431		MAST,INNER VM250	ﾏｽﾄ	1	
-	22Y58-30441		MAST,INNER VM270	ﾏｽﾄ	1	
-	22Y58-30451		MAST,INNER VM275	ﾏｽﾄ	1	
-	22Y58-30401		MAST,INNER VM300	ﾏｽﾄ	1	
-	22Y58-30461		MAST,INNER VM325	ﾏｽﾄ	1	
-	22Y58-30471		MAST,INNER VM330	ﾏｽﾄ	1	
-	22Y58-30481		MAST,INNER VM350	ﾏｽﾄ	1	
-	22Y58-30491		MAST,INNER VM366	ﾏｽﾄ	1	
-	22Y58-30501		MAST,INNER VM370	ﾏｽﾄ	1	
-	22Y58-30511		MAST,INNER VM375	ﾏｽﾄ	1	
-	22Y58-30521		MAST,INNER VM400	ﾏｽﾄ	1	
-	22Y58-30531		MAST,INNER VM425	ﾏｽﾄ	1	
-	22Y58-30541		MAST,INNER VM450	ﾏｽﾄ	1	
-	22Y58-30551		MAST,INNER VM475	ﾏｽﾄ	1	
-	22Y58-30561		MAST,INNER VM500	ﾏｽﾄ	1	

FIG.96 MAST [VM2Y5]

(M7038310) マスト

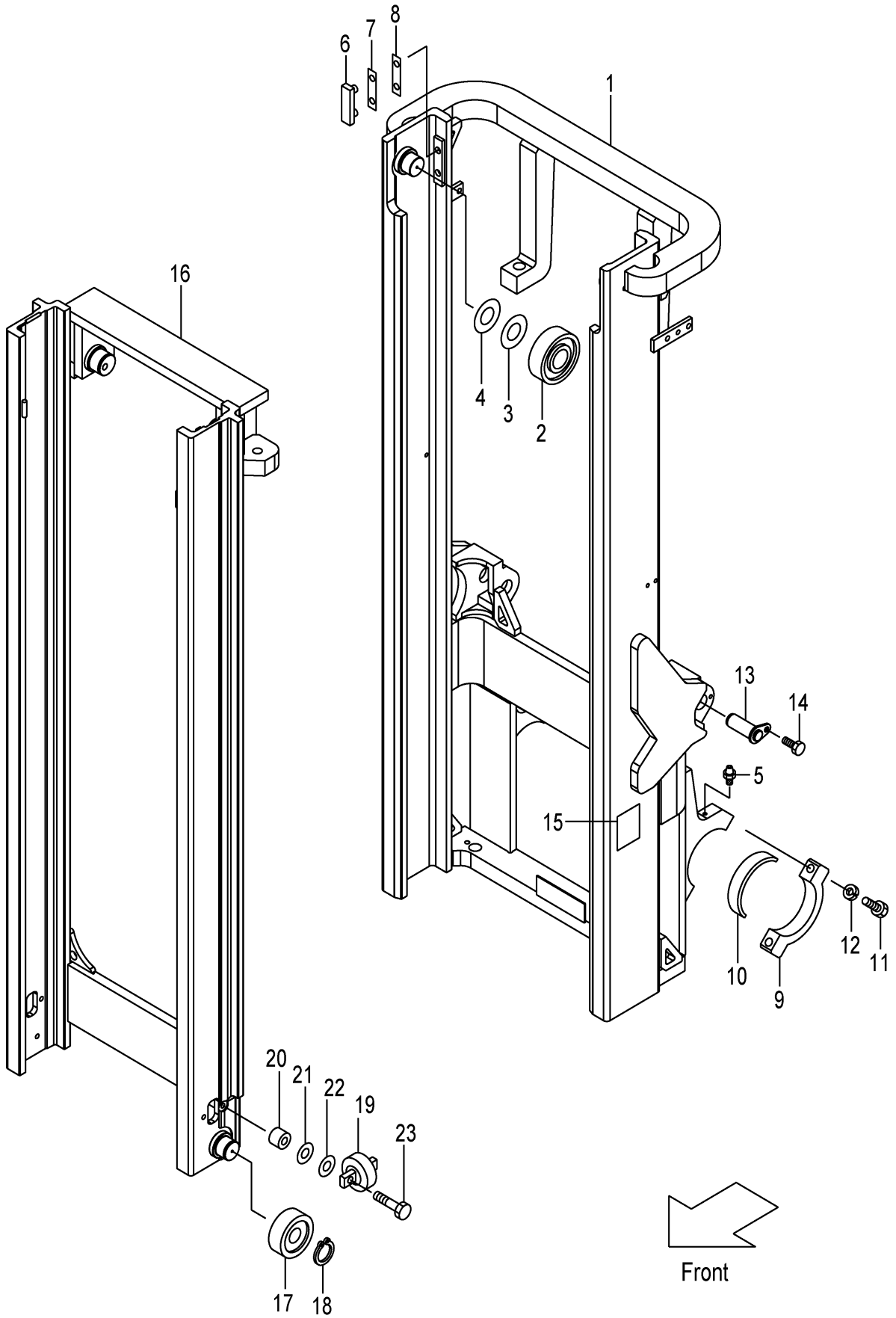

FIG.96
(M7038310)

A:VM2Y5

Item No	Part No.	Mark	Description		Req'd	Remarks : Serial No.
-	22Y58-30571		MAST,INNER VM550	ﾏｽﾄ	1	
-	22Y58-30581		MAST,INNER VM600	ﾏｽﾄ	1	
17	24609-42111		ROLLER,END,123.5	ﾛｰﾗ	2	
-	24609-42121		ROLLER,END,124.0	ﾛｰﾗ	(2)	
18	02100-00045		RING,SNAP	ﾘﾝｸﾞ	2	
19	23458-32052		ROLLER,SIDE	ﾛｰﾗ	2	
20	23818-30071		SPACER	ｽﾍﾟｰｻ	4	
21	22548-34051		SHIM,T-0.5	ｼﾑ	4	
22	22548-34061		SHIM,T-1.0	ｼﾑ	4	
23	01184-12045		BOLT	ﾎﾞﾙﾄ	4	

FIG.97 LIFT CYLINDER [VM2Y5]

(M7038410) ﾘﾌﾄｼﾘﾝﾀﾞ

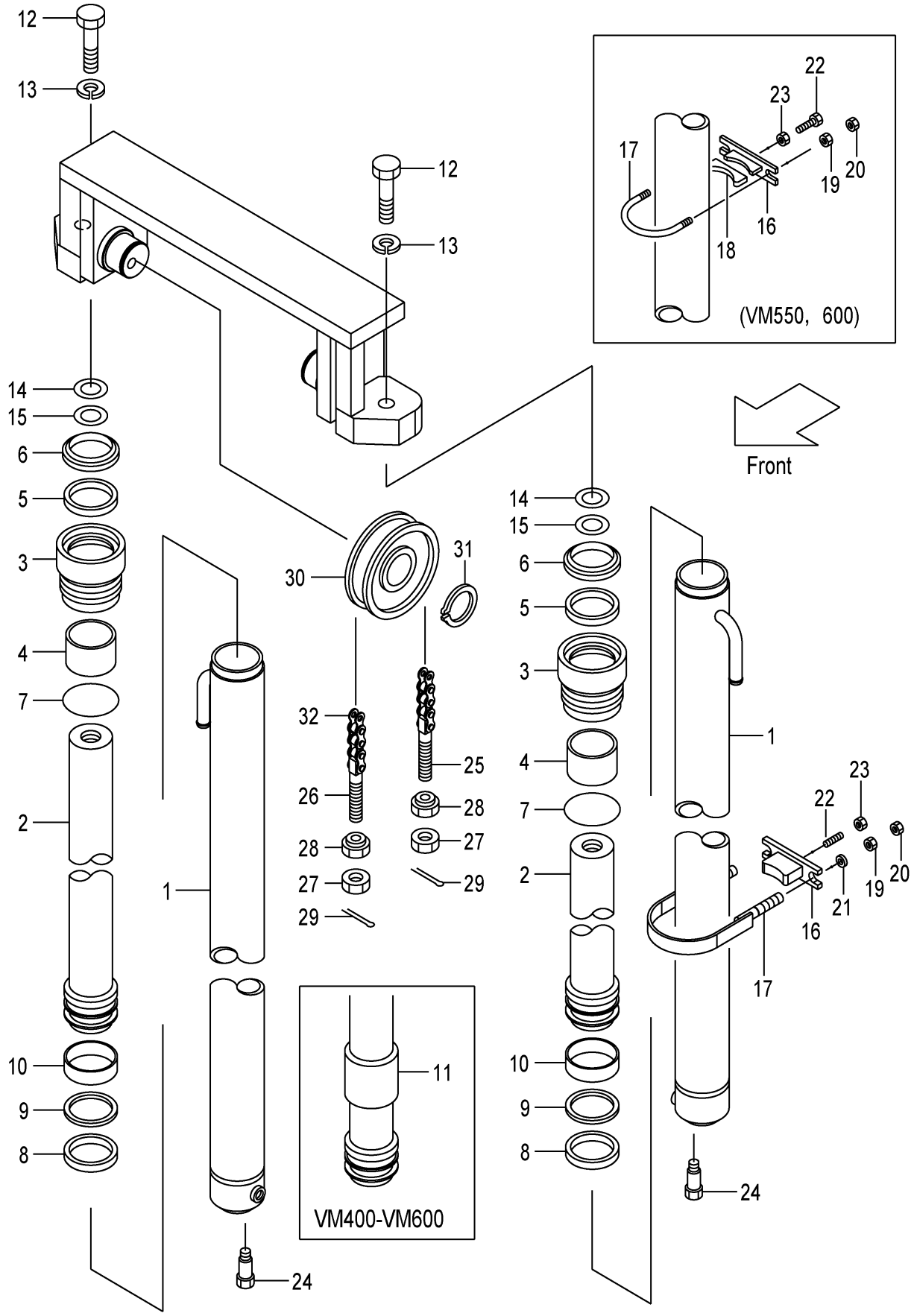

A:VM2Y5

Item No	Part No.	Mark	Description	Req'd	Remarks : Serial No.
A1	22Y58-40211		CYL-ASSY,LIFT VM200 ﾘﾌﾄｼﾘﾝﾀﾞｱｯｾﾝ	2	INC.1-12
-	22Y58-40221		CYL-ASSY,LIFT VM225 ﾘﾌﾄｼﾘﾝﾀﾞｱｯｾﾝ	2	INC.1-12
-	22Y58-40231		CYL-ASSY,LIFT VM250 ﾘﾌﾄｼﾘﾝﾀﾞｱｯｾﾝ	2	INC.1-12
-	22Y58-40241		CYL-ASSY,LIFT VM270 ﾘﾌﾄｼﾘﾝﾀﾞｱｯｾﾝ	2	INC.1-12
-	22Y58-40251		CYL-ASSY,LIFT VM275 ﾘﾌﾄｼﾘﾝﾀﾞｱｯｾﾝ	2	INC.1-12
-	22Y58-40201		CYL-ASSY,LIFT VM300 ﾘﾌﾄｼﾘﾝﾀﾞｱｯｾﾝ	2	INC.1-12
-	22Y58-40261		CYL-ASSY,LIFT VM325 ﾘﾌﾄｼﾘﾝﾀﾞｱｯｾﾝ	2	INC.1-12
-	22Y58-40271		CYL-ASSY,LIFT VM330 ﾘﾌﾄｼﾘﾝﾀﾞｱｯｾﾝ	2	INC.1-12
-	22Y58-40281		CYL-ASSY,LIFT VM350 ﾘﾌﾄｼﾘﾝﾀﾞｱｯｾﾝ	2	INC.1-12
-	22Y58-40291		CYL-ASSY,LIFT VM366 ﾘﾌﾄｼﾘﾝﾀﾞｱｯｾﾝ	2	INC.1-12
-	22Y58-40301		CYL-ASSY,LIFT VM370 ﾘﾌﾄｼﾘﾝﾀﾞｱｯｾﾝ	2	INC.1-12
-	22Y58-40311		CYL-ASSY,LIFT VM375 ﾘﾌﾄｼﾘﾝﾀﾞｱｯｾﾝ	2	INC.1-12
-	22Y58-40321		CYL-ASSY,LIFT VM400 ﾘﾌﾄｼﾘﾝﾀﾞｱｯｾﾝ	2	INC.1-14
-	22Y58-40331		CYL-ASSY,LIFT VM425 ﾘﾌﾄｼﾘﾝﾀﾞｱｯｾﾝ	2	INC.1-14
-	22Y58-40341		CYL-ASSY,LIFT VM450 ﾘﾌﾄｼﾘﾝﾀﾞｱｯｾﾝ	2	INC.1-14
-	22Y58-40351		CYL-ASSY,LIFT VM475 ﾘﾌﾄｼﾘﾝﾀﾞｱｯｾﾝ	2	INC.1-14
-	22Y58-40361		CYL-ASSY,LIFT VM500 ﾘﾌﾄｼﾘﾝﾀﾞｱｯｾﾝ	2	INC.1-14
-	22Y58-40371		CYL-ASSY,LIFT VM550 ﾘﾌﾄｼﾘﾝﾀﾞｱｯｾﾝ	2	INC.1-14
-	22Y58-40381		CYL-ASSY,LIFT VM600 ﾘﾌﾄｼﾘﾝﾀﾞｱｯｾﾝ	2	INC.1-14
1	22Y58-40411		BODY,CYL VM200 ﾎﾞﾃﾞｨ	2	
-	22Y58-40421		BODY,CYL VM225 ﾎﾞﾃﾞｨ	2	
-	22Y58-40431		BODY,CYL VM250 ﾎﾞﾃﾞｨ	2	
-	22Y58-40441		BODY,CYL VM270 ﾎﾞﾃﾞｨ	2	
-	22Y58-40451		BODY,CYL VM275 ﾎﾞﾃﾞｨ	2	
-	22Y58-40401		BODY,CYL VM300 ﾎﾞﾃﾞｨ	2	
-	22Y58-40461		BODY,CYL VM325 ﾎﾞﾃﾞｨ	2	
-	22Y58-40471		BODY,CYL VM330 ﾎﾞﾃﾞｨ	2	
-	22Y58-40481		BODY,CYL VM350 ﾎﾞﾃﾞｨ	2	
-	22Y58-40491		BODY,CYL VM366 ﾎﾞﾃﾞｨ	2	
-	22Y58-40501		BODY,CYL VM370 ﾎﾞﾃﾞｨ	2	
-	22Y58-40511		BODY,CYL VM375 ﾎﾞﾃﾞｨ	2	
-	22Y58-40521		BODY,CYL VM400 ﾎﾞﾃﾞｨ	2	
-	22Y58-40531		BODY,CYL VM425 ﾎﾞﾃﾞｨ	2	
-	22Y58-40541		BODY,CYL VM450 ﾎﾞﾃﾞｨ	2	
-	22Y58-40551		BODY,CYL VM475 ﾎﾞﾃﾞｨ	2	
-	22Y58-40561		BODY,CYL VM500 ﾎﾞﾃﾞｨ	2	
-	22Y58-40571		BODY,CYL VM550 ﾎﾞﾃﾞｨ	2	
-	22Y58-40581		BODY,CYL VM600 ﾎﾞﾃﾞｨ	2	
2	24629-41511		ROD,PISTON VM200 ﾛｯﾄﾞ	2	
-	24629-41521		ROD,PISTON VM225 ﾛｯﾄﾞ	2	
-	24629-41531		ROD,PISTON VM250 ﾛｯﾄﾞ	2	
-	24629-41541		ROD,PISTON VM270 ﾛｯﾄﾞ	2	
-	24629-41551		ROD,PISTON VM275 ﾛｯﾄﾞ	2	
-	24629-41501		ROD,PISTON VM300 ﾛｯﾄﾞ	2	
-	24629-41561		ROD,PISTON VM325 ﾛｯﾄﾞ	2	
-	24629-41571		ROD,PISTON VM330 ﾛｯﾄﾞ	2	
-	24629-41581		ROD,PISTON VM350 ﾛｯﾄﾞ	2	
-	24629-41591		ROD,PISTON VM366 ﾛｯﾄﾞ	2	
-	24629-41601		ROD,PISTON VM370 ﾛｯﾄﾞ	2	
-	24629-41611		ROD,PISTON VM375 ﾛｯﾄﾞ	2	

FIG.97 LIFT CYLINDER [VM2Y5]

(M7038410) ﾘﾌﾄｼﾘﾝﾀﾞ

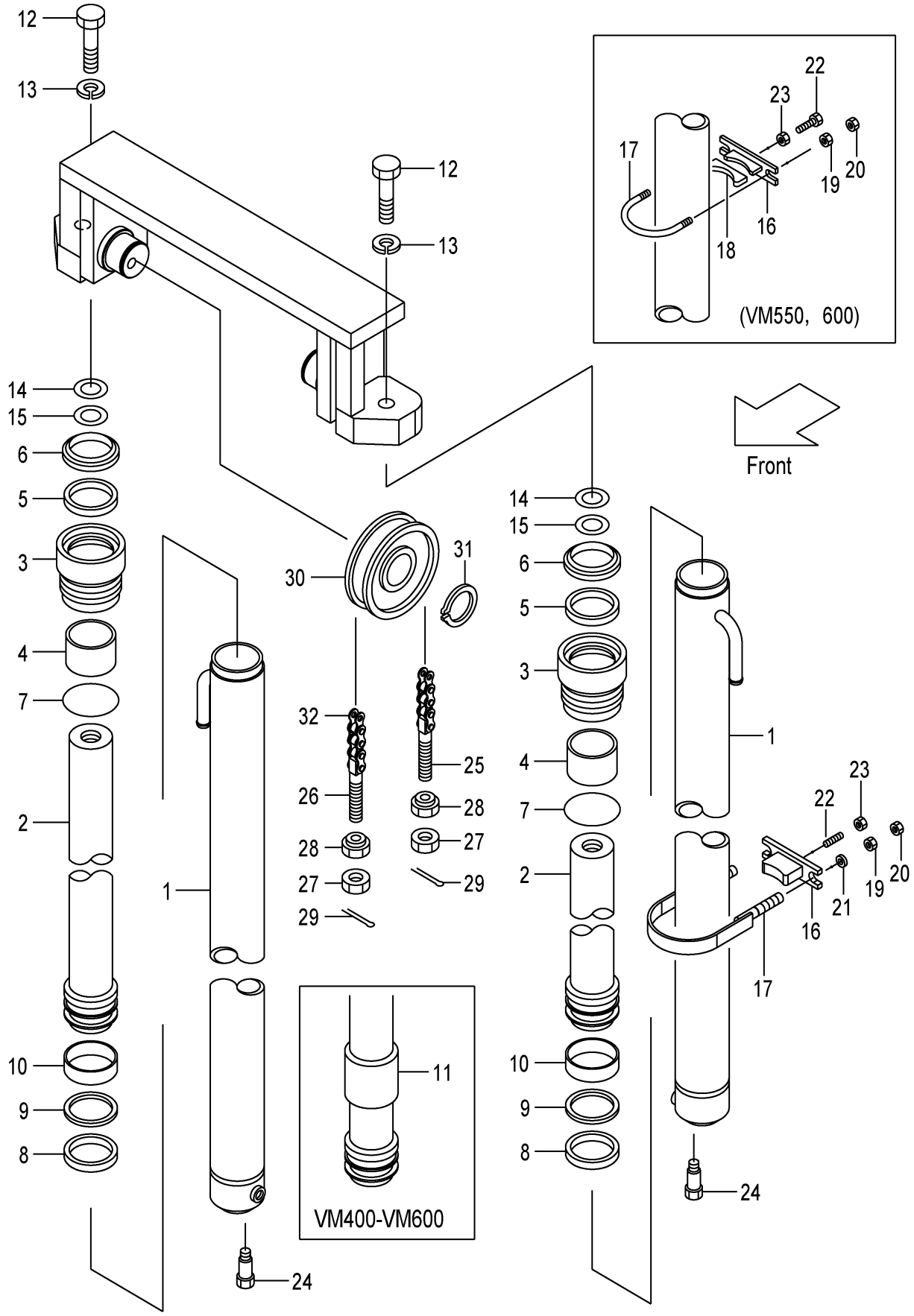

A:VM2Y5

Item No	Part No.	Mark	Description		Req'd	Remarks : Serial No.
-	24629-41621		ROD,PISTON VM400	ﾛｯﾄﾞ	2	
-	24629-41631		ROD,PISTON VM425	ﾛｯﾄﾞ	2	
-	24629-41641		ROD,PISTON VM450	ﾛｯﾄﾞ	2	
-	24629-41651		ROD,PISTON VM475	ﾛｯﾄﾞ	2	
-	24629-41661		ROD,PISTON VM500	ﾛｯﾄﾞ	2	
-	24629-41671		ROD,PISTON VM550	ﾛｯﾄﾞ	2	
-	24629-41681		ROD,PISTON VM600	ﾛｯﾄﾞ	2	
3	22Y58-42601		CAP	ｷｬｯﾌﾟ	2	
4	22Y58-42001		BUSHING	ﾌﾞｯｼﾝｸﾞ	2	
5	224T8-46011		PACKING	ﾊﾟｯｷﾝｸﾞ	2	
6	22N54-52141		SEAL,DUST	ｼｰﾙ	2	
7	214J8-42581		O-RING	Oﾘﾝｸﾞ	2	
8	23460-53161		PACKING	ﾊﾟｯｷﾝｸﾞ	2	
9	22658-52301		RING,BACK-UP	ﾘﾝｸﾞ	2	
10	23460-53181		WEARING	ｳｴｱﾘﾝｸﾞ	2	
11	22679-43431		SPACER	ｽﾍﾟｰｻ	2	(VM400-500)
-	22679-43431		SPACER	ｽﾍﾟｰｻ	4	(VM550,600)
12	01103-20060		BOLT	ﾎﾞﾙﾄ	2	
13	02011-00020		WASHER	ﾜｯｼｬ	2	
14	24319-45781		SHIM,T-0.2	ｼﾑ	4	
15	24319-45791		SHIM,T-0.5	ｼﾑ	2	
16	22Y58-42531		SUPPORT	ｻﾎﾟｰﾄ	2	(VM200-500)
-	224T8-42711		SUPPORT	ｻﾎﾟｰﾄ	2	(VM550,600)
17	22Y58-42501		BAND	ﾊﾞﾝﾄﾞ	2	(VM200-500)
-	224T8-42701		U-BOLT	Uﾎﾞﾙﾄ	2	(VM550,600)
18	214A8-42631		RUBBER	ﾗﾊﾞｰ	2	(VM550,600)
19	01400-00010		NUT	ﾅｯﾄ	4	
20	01402-00010		NUT	ﾅｯﾄ	4	
21	02000-00010		WASHER	ﾜｯｼｬ	4	(VM200-500)
22	215E8-42241		PLUG	ﾌﾟﾗｸﾞ	2	(VM200-500)
-	01120-16040		BOLT	ﾎﾞﾙﾄ	2	(VM550,600)
23	234A8-42571		NUT	ﾅｯﾄ	2	(VM200-500)
-	01402-00016		NUT	ﾅｯﾄ	2	(VM550,600)
24	214A0-82831		BOLT	ﾎﾞﾙﾄ	2	
25	24329-45441		PIN,ANCHOR	ﾋﾟﾝ	2	
26	23918-42681		PIN,ANCHOR	ﾋﾟﾝ	2	
27	01402-00022		NUT	ﾅｯﾄ	4	
28	23818-30271		NUT	ﾅｯﾄ	4	
29	02200-03040		PIN	ﾋﾟﾝ	4	
30	24609-41242		SHEAVE	ｼｰﾌﾞ	2	
31	02100-00050		RING,SNAP	ﾘﾝｸﾞ	2	
32	23918-45571		CHAIN VM200	ﾁｪｰﾝ	2	
-	23918-45611		CHAIN VM225	ﾁｪｰﾝ	2	
-	23918-45671		CHAIN VM250	ﾁｪｰﾝ	2	
-	23918-45711		CHAIN VM270	ﾁｪｰﾝ	2	
-	23918-45711		CHAIN VM275	ﾁｪｰﾝ	2	
-	23918-45771		CHAIN VM300	ﾁｪｰﾝ	2	
-	23918-45811		CHAIN VM325	ﾁｪｰﾝ	2	
-	23918-45831		CHAIN VM330	ﾁｪｰﾝ	2	
-	23918-45871		CHAIN VM350	ﾁｪｰﾝ	2	

FIG.97 LIFT CYLINDER [VM2Y5]

(M7038410) ﾘﾌﾄｼﾘﾝﾀﾞ

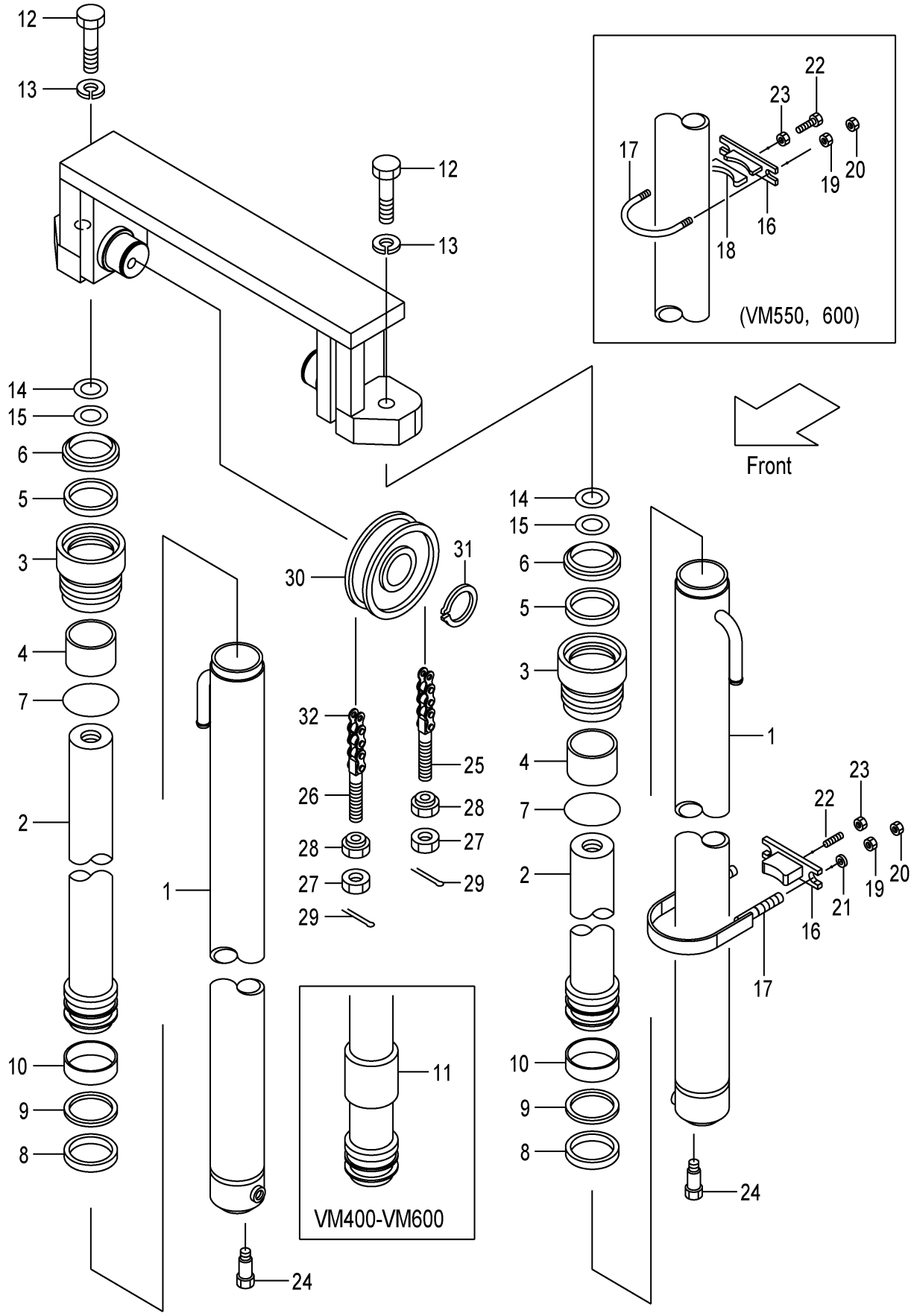

A:VM2Y5

Item No	Part No.	Mark	Description	Req'd	Remarks : Serial No.
-	23918-45891		CHAIN VM366 チェーン	2	
-	23918-45911		CHAIN VM370 チェーン	2	
-	23918-45911		CHAIN VM375 チェーン	2	
-	23918-45991		CHAIN VM400 チェーン	2	
-	23918-46031		CHAIN VM425 チェーン	2	
-	23918-46091		CHAIN VM450 チェーン	2	
-	23918-46131		CHAIN VM475 チェーン	2	
-	23918-46191		CHAIN VM500 チェーン	2	
-	23918-46291		CHAIN VM550 チェーン	2	
-	23918-46391		CHAIN VM600 チェーン	2	

FIG.98 MAST PIPING [VM2Y5]

(M7038420) マストパイピング

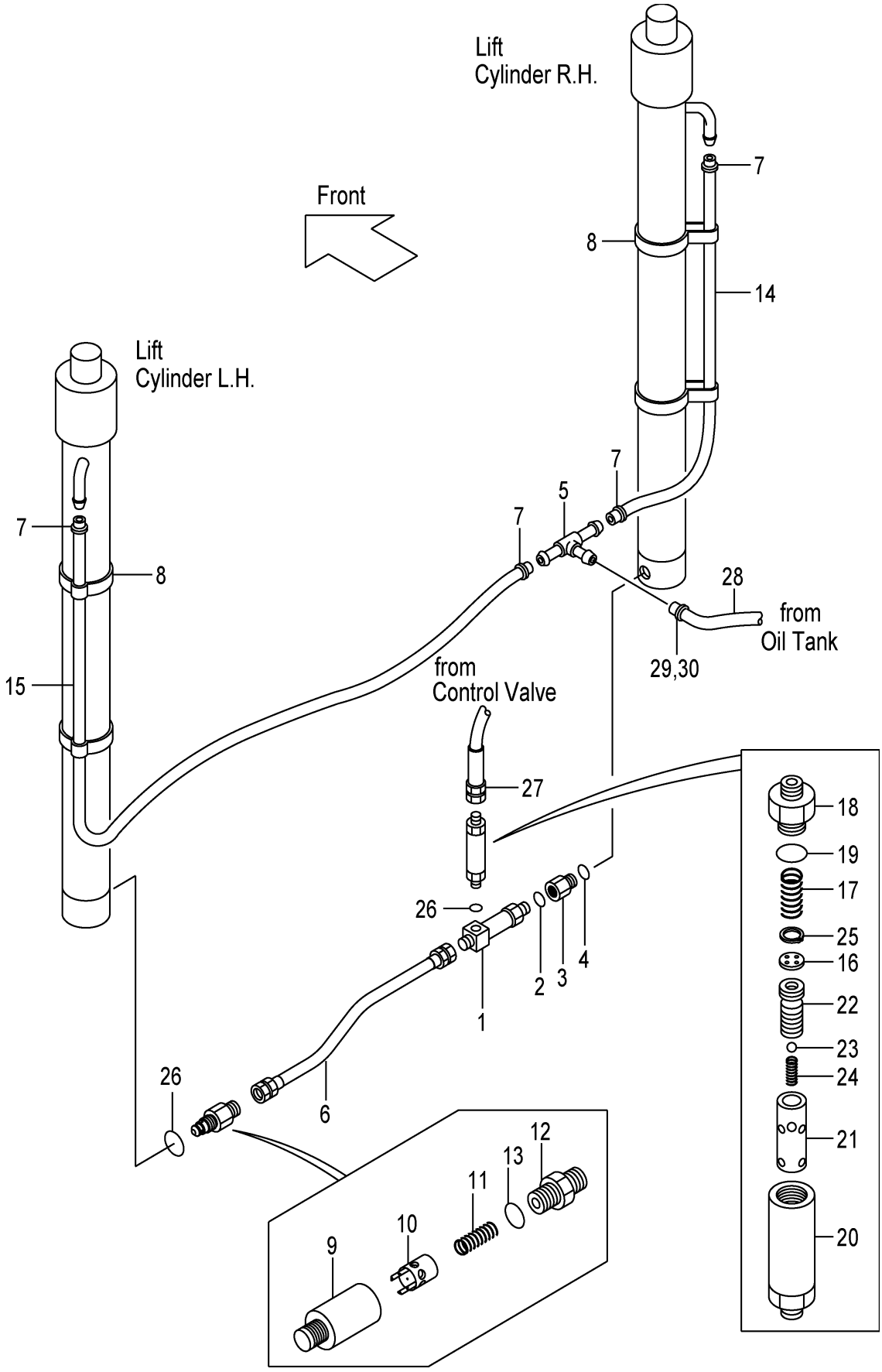

A:VM2Y5

Item No	Part No.	Mark	Description		Req'd	Remarks : Serial No.
A1	23659-44602		THREE-WAY-ASSY	ｽﾘｰｳｪｲｱｯｾﾝ	1	INC.1,2
1	NO PART NO.	#	THREE-WAY	ｽﾘｰｳｴｲ	1	
2	03320-00180		O-RING	Oﾘﾝｸﾞ	1	
A2	228C0-91011		NIPPLE-ASSY	ﾆｯﾌﾟﾙｱｯｾﾝ	1	INC.3,4
3	NO PART NO.	#	NIPPLE	ﾆｯﾌﾟﾙ	1	
4	03320-00180		O-RING	Oﾘﾝｸﾞ	1	
5	53675-55051		THREE-WAY	ｽﾘｰｳｴｲ	1	
6	22Y58-42101		HOSE	ﾎｰｽ	1	
7	24329-46201		CLIP	ｸﾘｯﾌﾟ	4	
8	22N58-45001		BAND	ﾊﾞﾝﾄﾞ	4	
A3	24460-60101		VALVE-ASSY,CUT	ｶｯﾄﾊﾞﾙﾌﾞｱｯｾﾝ	1	INC.9-13
9	NO PART NO.	#	CASE	ｹｰｽ	1	
10	NO PART NO.	#	PISTON	ﾋﾟｽﾄﾝ	1	
11	27978-42601		SPRING	ｽﾌﾟﾘﾝｸﾞ	1	
A4	24459-42991		NIPPLE-ASSY	ﾆｯﾌﾟﾙｱｯｾﾝ	1	INC.12,13
12	NO PART NO.	#	NIPPLE	ﾆｯﾌﾟﾙ	1	
13	03320-00180		O-RING	Oﾘﾝｸﾞ	1	
14	24328-40115		HOSE,RH VM200	ﾎｰｽ	1	
-	24328-40125		HOSE,RH VM225	ﾎｰｽ	1	
-	24328-40140		HOSE,RH VM250	ﾎｰｽ	1	
-	24328-40150		HOSE,RH VM270	ﾎｰｽ	1	
-	24328-40150		HOSE,RH VM275	ﾎｰｽ	1	
-	24328-40165		HOSE,RH VM300	ﾎｰｽ	1	
-	24328-40175		HOSE,RH VM325	ﾎｰｽ	1	
-	24328-40180		HOSE,RH VM330	ﾎｰｽ	1	
-	24328-40190		HOSE,RH VM350	ﾎｰｽ	1	
-	24328-40200		HOSE,RH VM366	ﾎｰｽ	1	
-	24328-40200		HOSE,RH VM370	ﾎｰｽ	1	
-	24328-40200		HOSE,RH VM375	ﾎｰｽ	1	
-	24328-40220		HOSE,RH VM400	ﾎｰｽ	1	
-	24328-40230		HOSE,RH VM425	ﾎｰｽ	1	
-	24328-40245		HOSE,RH VM450	ﾎｰｽ	1	
-	24328-40255		HOSE,RH VM475	ﾎｰｽ	1	
-	24328-40270		HOSE,RH VM500	ﾎｰｽ	1	
-	24328-40300		HOSE,RH VM550	ﾎｰｽ	1	
-	24328-40325		HOSE,RH VM600	ﾎｰｽ	1	
15	24328-40150		HOSE,LH VM200	ﾎｰｽ	1	
-	24328-40170		HOSE,LH VM225	ﾎｰｽ	1	
-	24328-40175		HOSE,LH VM250	ﾎｰｽ	1	
-	24328-40185		HOSE,LH VM270	ﾎｰｽ	1	
-	24328-40185		HOSE,LH VM275	ﾎｰｽ	1	
-	24328-40195		HOSE,LH VM300	ﾎｰｽ	1	
-	24328-40210		HOSE,LH VM325	ﾎｰｽ	1	
-	24328-40215		HOSE,LH VM330	ﾎｰｽ	1	
-	24328-40225		HOSE,LH VM350	ﾎｰｽ	1	
-	24328-40235		HOSE,LH VM366	ﾎｰｽ	1	
-	24328-40235		HOSE,LH VM370	ﾎｰｽ	1	
-	24328-40235		HOSE,LH VM375	ﾎｰｽ	1	
-	24328-40255		HOSE,LH VM400	ﾎｰｽ	1	
-	24328-40265		HOSE,LH VM425	ﾎｰｽ	1	

FIG.98 MAST PIPING [VM2Y5]

(M7038420) マストパイピング

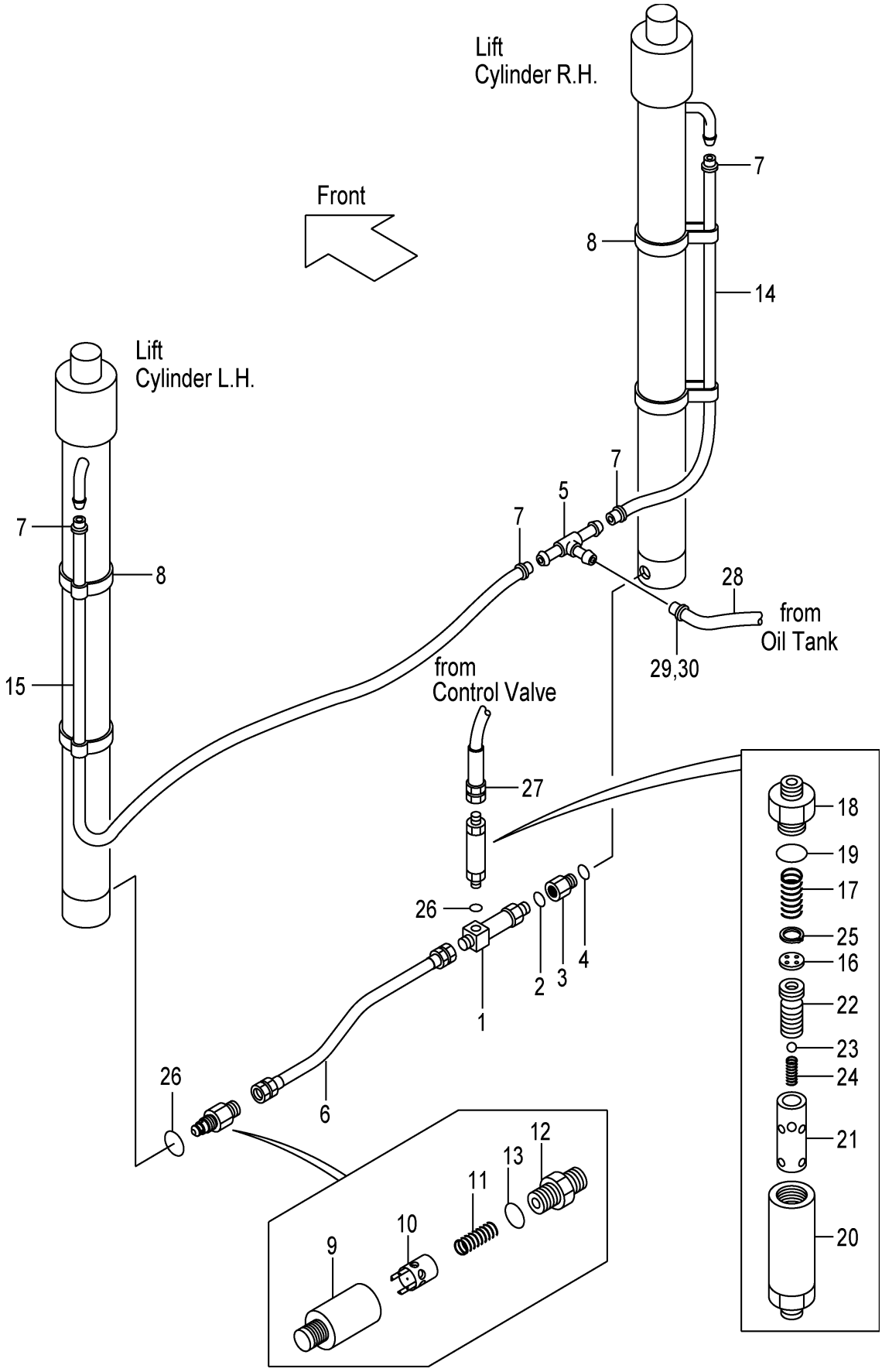

A:VM2Y5

Item No	Part No.	Mark	Description		Req'd	Remarks : Serial No.
-	24328-40280		HOSE,LH VM450	ﾎｰｽ	1	
-	24328-40290		HOSE,LH VM475	ﾎｰｽ	1	
-	24328-40305		HOSE,LH VM500	ﾎｰｽ	1	
-	24328-40335		HOSE,LH VM550	ﾎｰｽ	1	
-	24328-40360		HOSE,LH VM600	ﾎｰｽ	1	
A5	22Y58-41001		REGULATOR-ASSY	ﾚｷﾞｭﾚｰﾀｱｯｾﾝ	1	INC.16-25
16	NO PART NO.	#	PLATE	ﾌﾟﾚｰﾄ	1	
17	27979-43101		SPRING	ｽﾌﾟﾘﾝｸﾞ	1	
18	NO PART NO.	#	NIPPLE	ﾆｯﾌﾟﾙ	1	
19	03320-00280		O-RING	Oﾘﾝｸﾞ	1	
20	NO PART NO.	#	CASE	ｹｰｽ	1	
21	NO PART NO.	#	SLEEVE	ｽﾘｰﾌﾞ	1	
22	NO PART NO.	#	PISTON	ﾋﾟｽﾄﾝ	1	
23	24459-42951		BALL,NYLON	ﾎﾞｰﾙ	1	
24	214A8-44151		SPRING	ｽﾌﾟﾘﾝｸﾞ	1	
25	02110-00018		RING,SNAP	ﾘﾝｸﾞ	1	
26	03320-00180		O-RING	Oﾘﾝｸﾞ	2	
27	234A8-02101		HOSE	ﾎｰｽ	1	
28	24328-40150		HOSE	ﾎｰｽ	1	
29	04911-00021		CLIP	ｸﾘｯﾌﾟ	1	
30	24329-46201		CLIP	ｸﾘｯﾌﾟ	1	

FIG.99 FORK [VFM2Y5]

(M7038120) フォーク

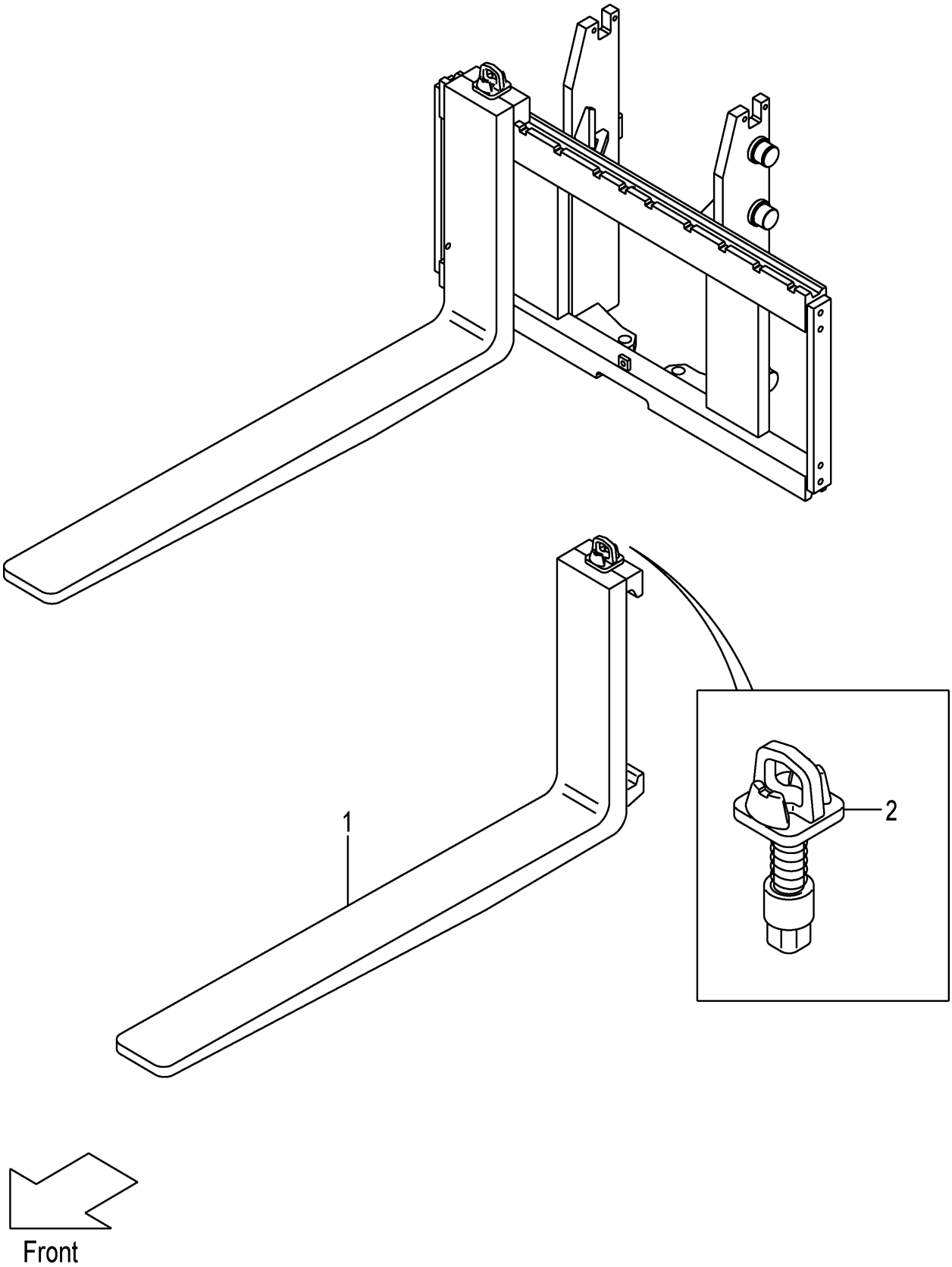

A:VFM2Y5

Item No	Part No.	Mark	Description		Req'd	Remarks : Serial No.
1	24328-10514		FORK	ﾌｫｰｸ	2	(L=1070) INC.2
-	24328-10503		FORK	ﾌｫｰｸ	2	[LF100] INC.2
-	24328-10514		FORK	ﾌｫｰｸ	2	[LF107] INC.2
-	24328-10523		FORK	ﾌｫｰｸ	2	[LF110] INC.2
-	24328-10533		FORK	ﾌｫｰｸ	2	[LF120] INC.2
-	24328-10544		FORK	ﾌｫｰｸ	2	[LF122] INC.2
-	24328-12304		FORK	ﾌｫｰｸ	2	[LF130] INC.2
-	24328-10554		FORK	ﾌｫｰｸ	2	[LF137] INC.2
-	24328-12314		FORK	ﾌｫｰｸ	2	[LF140] INC.2
-	24328-12324		FORK	ﾌｫｰｸ	2	[LF150] INC.2
-	24328-10564		FORK	ﾌｫｰｸ	2	[LF152] INC.2
-	24328-12334		FORK	ﾌｫｰｸ	2	[LF160] INC.2
-	24328-10574		FORK	ﾌｫｰｸ	2	[LF167] INC.2
-	24328-12344		FORK	ﾌｫｰｸ	2	[LF170] INC.2
-	24328-12354		FORK	ﾌｫｰｸ	2	[LF180] INC.2
-	24328-10584		FORK	ﾌｫｰｸ	2	[LF182] INC.2
-	24328-12364		FORK	ﾌｫｰｸ	2	[LF190] INC.2
-	24328-10594		FORK	ﾌｫｰｸ	2	[LF197] INC.2
-	24328-12374		FORK	ﾌｫｰｸ	2	[LF200] INC.2
-	24328-12384		FORK	ﾌｫｰｸ	2	[LF210] INC.2
-	24328-12604		FORK	ﾌｫｰｸ	2	[LF212] INC.2
2	214J8-11002		STOPPER,FORK	ｽﾄｯﾊﾟ	2	

FIG.100 LIFT BRACKET [VFM2Y5]

(M7030610) ﾘﾌﾄﾌﾞﾗｹｯﾄ

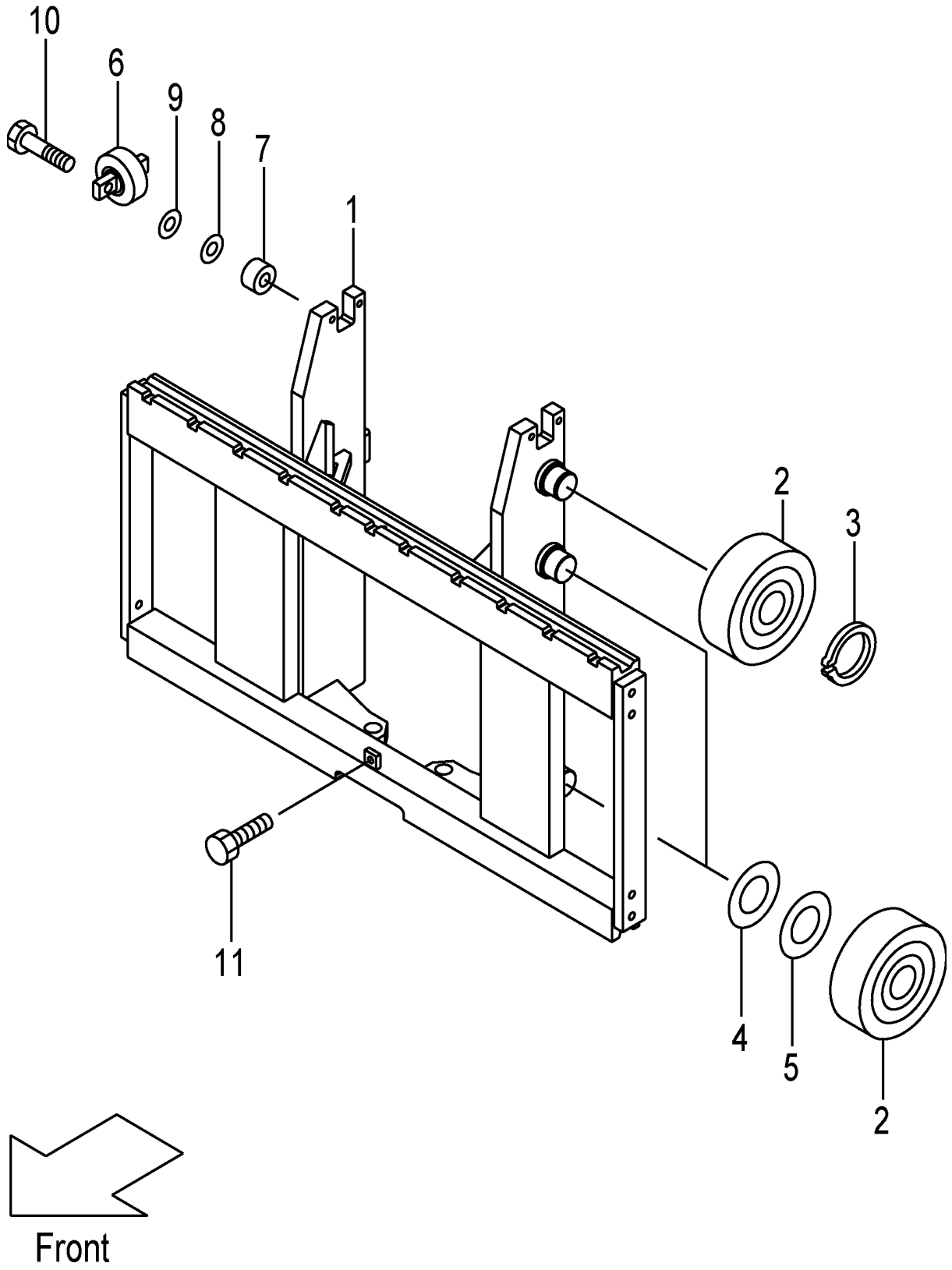

A:VFM2Y5

Item No	Part No.	Mark	Description		Req'd	Remarks : Serial No.
1	22Y50-60201		BRACKET,LIFT	ﾌﾞﾗｹｯﾄ	1	
2	277P8-22051		ROLLER,END,119.0	ﾛｰﾗ	6	
-	277P8-22061		ROLLER,END,119.5	ﾛｰﾗ	(6)	
3	02100-00045		RING,SNAP	ﾘﾝｸﾞ	2	
4	277P8-22071		SHIM,T-0.5	ｼﾑ	5	
5	277P8-22081		SHIM,T-1.0	ｼﾑ	5	
6	22N58-32701		ROLLER,SIDE	ﾛｰﾗ	2	
7	22N58-32711		SPACER	ｽﾍﾟｰｻ	4	
8	22018-30261		SHIM,T-0.2	ｼﾑ	4	
9	22018-30121		SHIM,T-1.0	ｼﾑ	4	
10	01103-10045		BOLT	ﾎﾞﾙﾄ	4	
11	01184-12025		BOLT & WASHER	ﾎﾞﾙﾄ&ﾜｯｼｬ	1	

FIG.101 BACKREST [VFM2Y5]

(M7038230) ﾊﾞｯｸﾚｽﾄ

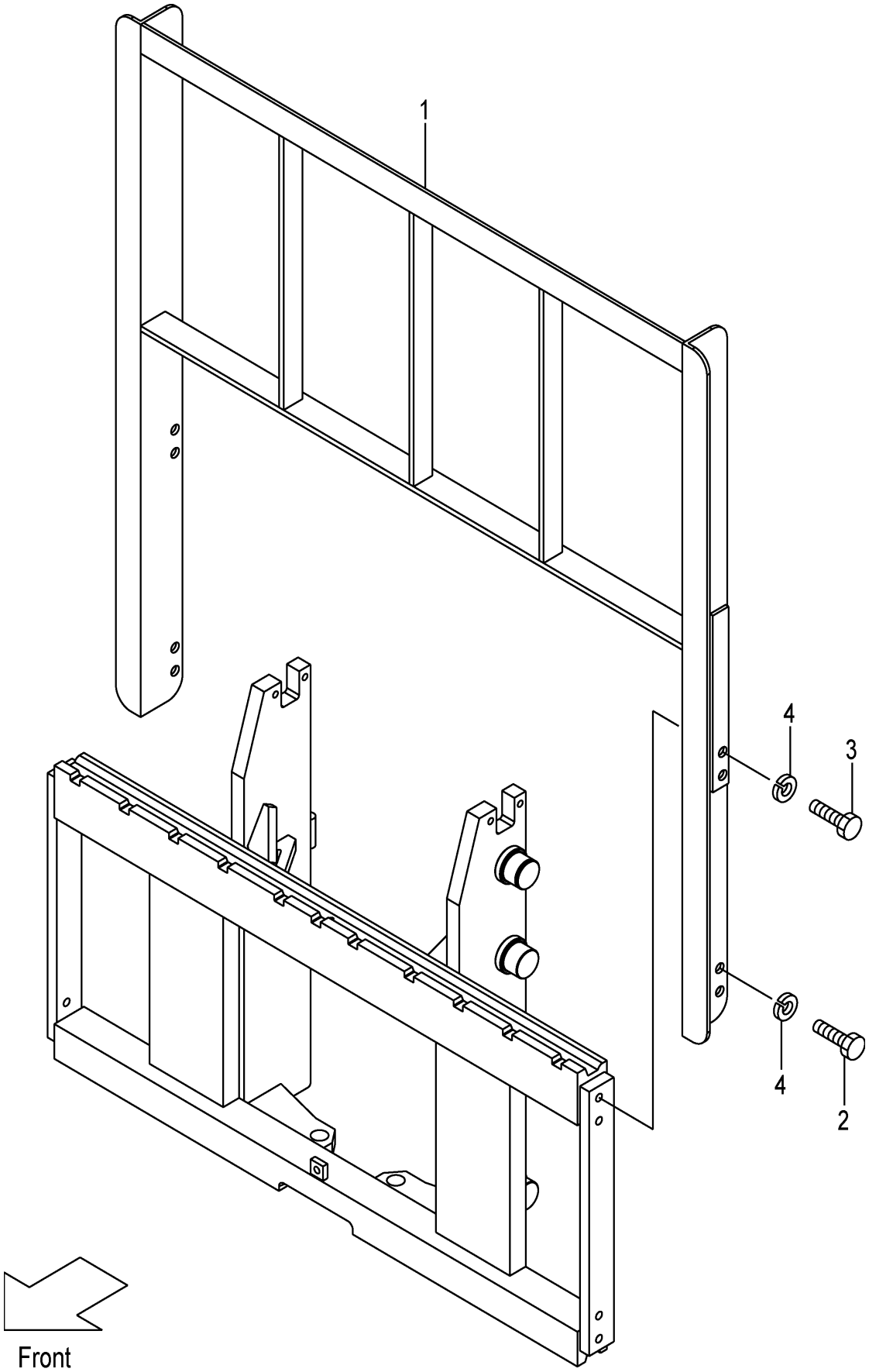

FIG.101
(M7038230)

A:VFM2Y5

Item No	Part No.	Mark	Description		Req'd	Remarks : Serial No.
1	234F8-22201		BACKREST	ﾊﾞｯｸﾚｽﾄ	1	
2	01100-14025		BOLT	ﾎﾞﾙﾄ	4	
3	01100-14030		BOLT	ﾎﾞﾙﾄ	4	
4	02010-00014		WASHER	ﾜｯｼｬ	8	

FIG.102 MAST [VFM2Y5]

(M7030410) マスト

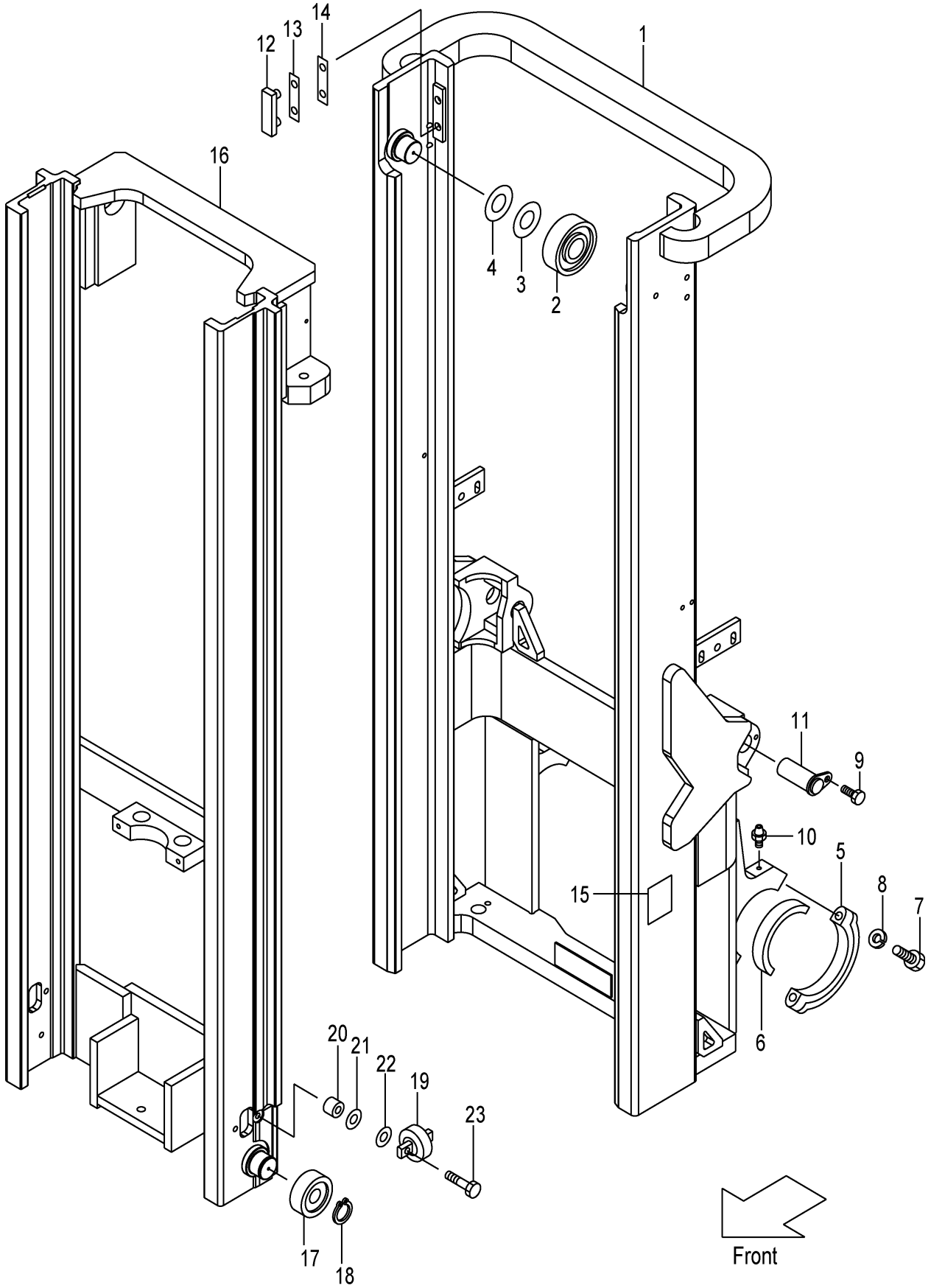

A:VFM2Y5

Item No	Part No.	Mark	Description		Req'd	Remarks : Serial No.
1	22Y50-40211		MAST,OUTER VFM200	ﾏｽﾄ	1	
-	22Y50-40221		MAST,OUTER VFM225	ﾏｽﾄ	1	
-	22Y50-40231		MAST,OUTER VFM250	ﾏｽﾄ	1	
-	22Y50-40241		MAST,OUTER VFM270	ﾏｽﾄ	1	
-	22Y50-40251		MAST,OUTER VFM275	ﾏｽﾄ	1	
-	22Y50-40201		MAST,OUTER VFM300	ﾏｽﾄ	1	
-	22Y50-40261		MAST,OUTER VFM325	ﾏｽﾄ	1	
-	22Y50-40271		MAST,OUTER VFM330	ﾏｽﾄ	1	
-	22Y50-40281		MAST,OUTER VFM350	ﾏｽﾄ	1	
-	22Y50-40291		MAST,OUTER VFM366	ﾏｽﾄ	1	
-	22Y50-40301		MAST,OUTER VFM370	ﾏｽﾄ	1	
-	22Y50-40311		MAST,OUTER VFM375	ﾏｽﾄ	1	
-	22Y50-40321		MAST,OUTER VFM400	ﾏｽﾄ	1	
-	22Y50-40331		MAST,OUTER VFM425	ﾏｽﾄ	1	
-	22Y50-40341		MAST,OUTER VFM450	ﾏｽﾄ	1	
-	22Y50-40351		MAST,OUTER VFM475	ﾏｽﾄ	1	
-	22Y50-40361		MAST,OUTER VFM500	ﾏｽﾄ	1	
-	22Y50-40371		MAST,OUTER VFM550	ﾏｽﾄ	1	
-	22Y50-40381		MAST,OUTER VFM600	ﾏｽﾄ	1	
2	277P8-22051		ROLLER,END,119.0	ﾛｰﾗ	2	
3	277P8-22071		SHIM,T-0.5	ｼﾑ	12	
4	277P8-22081		SHIM,T-1.0	ｼﾑ	12	
5	277P8-32701		CAP	ｷｬｯﾌﾟ	2	
6	214A8-02201		BUSHING	ﾌﾞｯｼﾝｸﾞ	2	
7	01103-16065		BOLT	ﾎﾞﾙﾄ	4	
8	02011-00016		WASHER	ﾜｯｼｬ	4	
9	216G8-52301		BOLT	ﾎﾞﾙﾄ	2	
10	04901-00100		FITTING	ﾌｨｯﾃｨﾝｸﾞ	2	
11	22N58-52501		PIN	ﾋﾟﾝ	2	
12	22Y58-33361		SLIPPER	ｽﾘｯﾊﾟ	2	
13	216G8-33361		SHIM,T-0.5	ｼﾑ	4	
14	216G8-33371		SHIM,T-1.0	ｼﾑ	2	
15	23678-06002		PLATE,NAME	ﾌﾟﾚｰﾄ	1	
16	22Y50-40411		MAST,INNER VFM200	ﾏｽﾄ	1	
-	22Y50-40421		MAST,INNER VFM225	ﾏｽﾄ	1	
-	22Y50-40431		MAST,INNER VFM250	ﾏｽﾄ	1	
-	22Y50-40441		MAST,INNER VFM270	ﾏｽﾄ	1	
-	22Y50-40451		MAST,INNER VFM275	ﾏｽﾄ	1	
-	22Y50-40401		MAST,INNER VFM300	ﾏｽﾄ	1	
-	22Y50-40461		MAST,INNER VFM325	ﾏｽﾄ	1	
-	22Y50-40471		MAST,INNER VFM330	ﾏｽﾄ	1	
-	22Y50-40481		MAST,INNER VFM350	ﾏｽﾄ	1	
-	22Y50-40491		MAST,INNER VFM366	ﾏｽﾄ	1	
-	22Y50-40501		MAST,INNER VFM370	ﾏｽﾄ	1	
-	22Y50-40511		MAST,INNER VFM375	ﾏｽﾄ	1	
-	22Y50-40521		MAST,INNER VFM400	ﾏｽﾄ	1	
-	22Y50-40531		MAST,INNER VFM425	ﾏｽﾄ	1	
-	22Y50-40541		MAST,INNER VFM450	ﾏｽﾄ	1	
-	22Y50-40551		MAST,INNER VFM475	ﾏｽﾄ	1	
-	22Y50-40561		MAST,INNER VFM500	ﾏｽﾄ	1	

FIG.102 MAST [VFM2Y5]

(M7030410) マスト

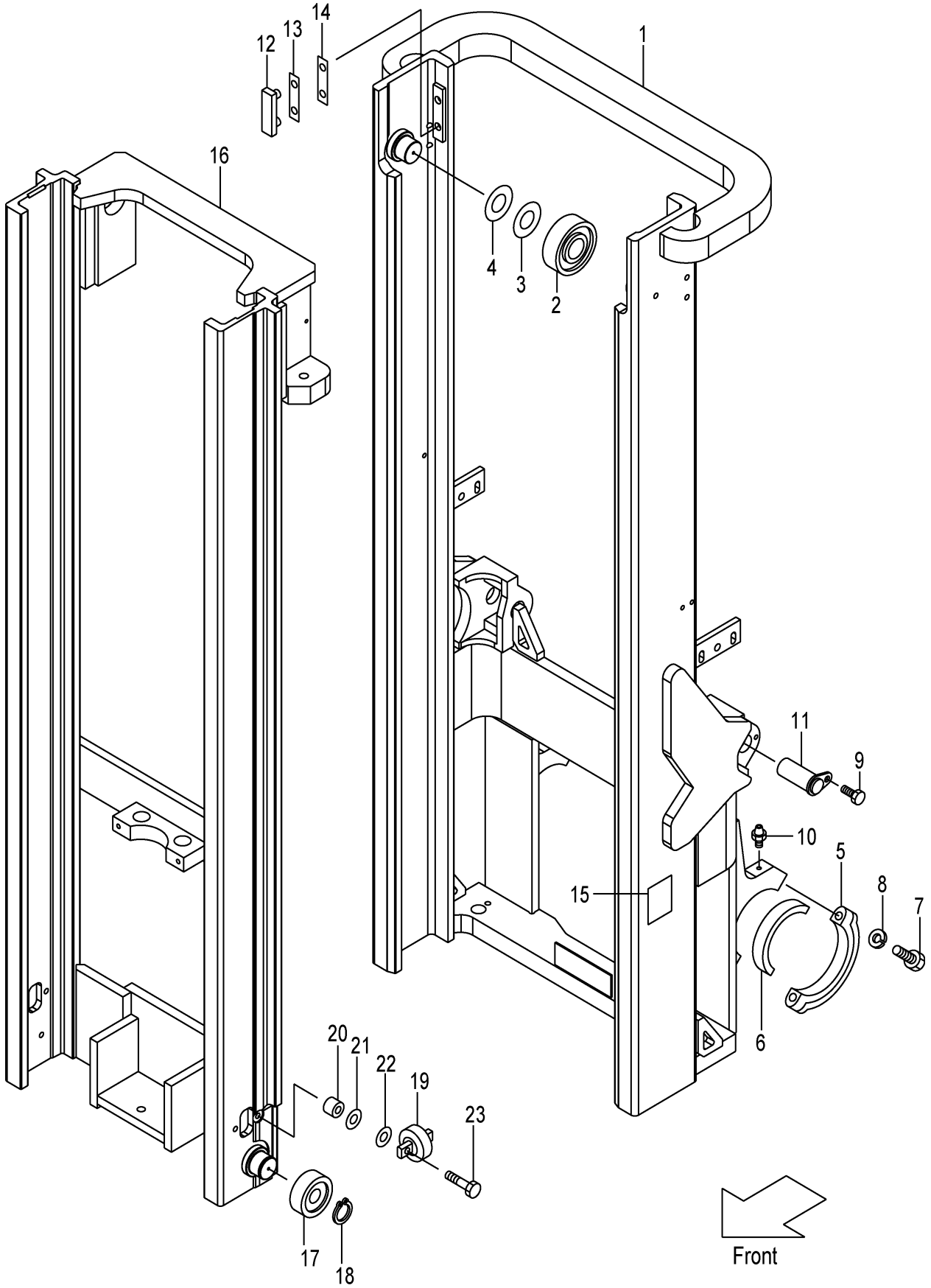

A:VFM2Y5

Item No	Part No.	Mark	Description		Req'd	Remarks : Serial No.
-	22Y50-40571		MAST,INNER VFM550	ﾏｽﾄ	1	
-	22Y50-40581		MAST,INNER VFM600	ﾏｽﾄ	1	
17	24609-42111		ROLLER,END,123.5	ﾛｰﾗ	2	
-	24609-42121		ROLLER,END,124.0	ﾛｰﾗ	(2)	
18	02100-00045		RING,SNAP	ﾘﾝｸﾞ	2	
19	23458-32052		ROLLER,SIDE	ﾛｰﾗ	2	
20	23818-30071		SPACER	ｽﾍﾟｰｻ	4	
21	22548-34051		SHIM,T-0.5	ｼﾑ	4	
22	22548-34061		SHIM,T-1.0	ｼﾑ	4	
23	01184-12045		BOLT	ﾎﾞﾙﾄ	4	

FIG.103 LIFT CYLINDER(FRONT) [VFM2Y5]

(M7030510) リフトシリンダ(フロント)

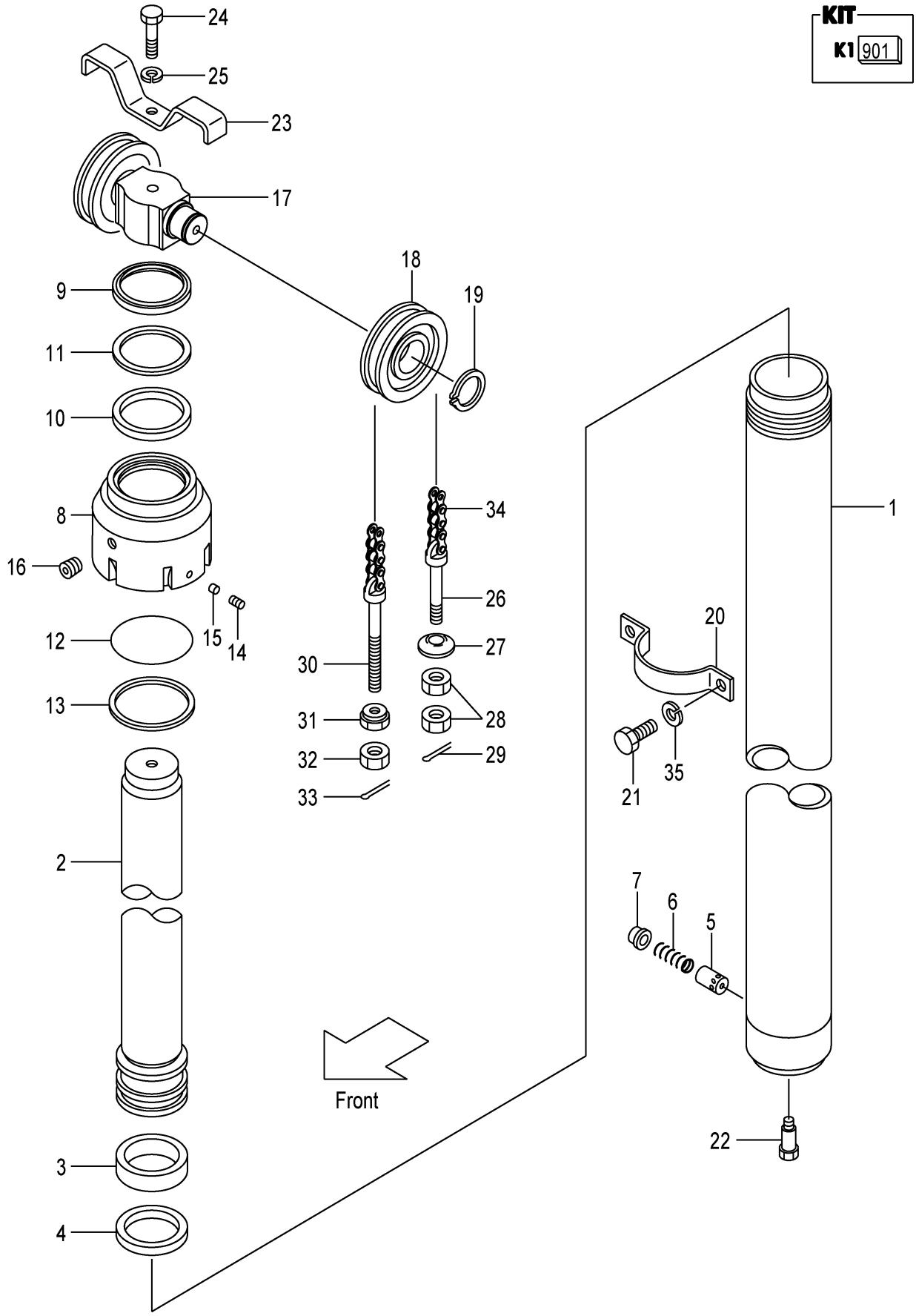

A:VFM2Y5

Item No	Part No.	Mark	Description		Req'd	Remarks : Serial No.
A1	214T0-50112		CYL-ASSY,LIFT VFM200	ﾘﾌﾄｼﾘﾝﾀﾞｱｯｾﾝ	1	INC.1-16
-	214T0-50122		CYL-ASSY,LIFT VFM225	ﾘﾌﾄｼﾘﾝﾀﾞｱｯｾﾝ	1	INC.1-16
-	224T0-80012		CYL-ASSY,LIFT VFM250	ﾘﾌﾄｼﾘﾝﾀﾞｱｯｾﾝ	1	INC.1-16
-	214T0-50142		CYL-ASSY,LIFT VFM270	ﾘﾌﾄｼﾘﾝﾀﾞｱｯｾﾝ	1	INC.1-16
-	214T0-50152		CYL-ASSY,LIFT VFM275	ﾘﾌﾄｼﾘﾝﾀﾞｱｯｾﾝ	1	INC.1-16
-	224T0-80002		CYL-ASSY,LIFT VFM300	ﾘﾌﾄｼﾘﾝﾀﾞｱｯｾﾝ	1	INC.1-16
-	214T0-50162		CYL-ASSY,LIFT VFM325	ﾘﾌﾄｼﾘﾝﾀﾞｱｯｾﾝ	1	INC.1-16
-	224T0-80032		CYL-ASSY,LIFT VFM330	ﾘﾌﾄｼﾘﾝﾀﾞｱｯｾﾝ	1	INC.1-16
-	224T0-80042		CYL-ASSY,LIFT VFM350	ﾘﾌﾄｼﾘﾝﾀﾞｱｯｾﾝ	1	INC.1-16
-	214T0-50192		CYL-ASSY,LIFT VFM366	ﾘﾌﾄｼﾘﾝﾀﾞｱｯｾﾝ	1	INC.1-16
-	214T0-50202		CYL-ASSY,LIFT VFM370	ﾘﾌﾄｼﾘﾝﾀﾞｱｯｾﾝ	1	INC.1-16
-	214T0-50212		CYL-ASSY,LIFT VFM375	ﾘﾌﾄｼﾘﾝﾀﾞｱｯｾﾝ	1	INC.1-16
-	214T0-50222		CYL-ASSY,LIFT VFM400	ﾘﾌﾄｼﾘﾝﾀﾞｱｯｾﾝ	1	INC.1-16
-	214T0-50232		CYL-ASSY,LIFT VFM425	ﾘﾌﾄｼﾘﾝﾀﾞｱｯｾﾝ	1	INC.1-16
-	214T0-50242		CYL-ASSY,LIFT VFM450	ﾘﾌﾄｼﾘﾝﾀﾞｱｯｾﾝ	1	INC.1-16
-	214T0-50252		CYL-ASSY,LIFT VFM475	ﾘﾌﾄｼﾘﾝﾀﾞｱｯｾﾝ	1	INC.1-16
-	214T0-50262		CYL-ASSY,LIFT VFM500	ﾘﾌﾄｼﾘﾝﾀﾞｱｯｾﾝ	1	INC.1-16
-	214T0-50272		CYL-ASSY,LIFT VFM550	ﾘﾌﾄｼﾘﾝﾀﾞｱｯｾﾝ	1	INC.1-16
-	214T0-50282		CYL-ASSY,LIFT VFM600	ﾘﾌﾄｼﾘﾝﾀﾞｱｯｾﾝ	1	INC.1-16
901	224T0-59801	K1	KIT,OVERHAUL	ｵｰﾊﾞﾎｰﾙｷｯﾄ	1	INC.3,4,9-13
1	214T0-50311		BODY,CYL VFM200	ﾎﾞﾃﾞｨ	1	
-	214T0-50321		BODY,CYL VFM225	ﾎﾞﾃﾞｨ	1	
-	224T0-80211		BODY,CYL VFM250	ﾎﾞﾃﾞｨ	1	
-	214T0-50341		BODY,CYL VFM270	ﾎﾞﾃﾞｨ	1	
-	214T0-50351		BODY,CYL VFM275	ﾎﾞﾃﾞｨ	1	
-	224T0-80201		BODY,CYL VFM300	ﾎﾞﾃﾞｨ	1	
-	214T0-50361		BODY,CYL VFM325	ﾎﾞﾃﾞｨ	1	
-	224T0-80231		BODY,CYL VFM330	ﾎﾞﾃﾞｨ	1	
-	224T0-80241		BODY,CYL VFM350	ﾎﾞﾃﾞｨ	1	
-	214T0-50391		BODY,CYL VFM366	ﾎﾞﾃﾞｨ	1	
-	214T0-50401		BODY,CYL VFM370	ﾎﾞﾃﾞｨ	1	
-	214T0-50411		BODY,CYL VFM375	ﾎﾞﾃﾞｨ	1	
-	214T0-50421		BODY,CYL VFM400	ﾎﾞﾃﾞｨ	1	
-	214T0-50431		BODY,CYL VFM425	ﾎﾞﾃﾞｨ	1	
-	214T0-50441		BODY,CYL VFM450	ﾎﾞﾃﾞｨ	1	
-	214T0-50451		BODY,CYL VFM475	ﾎﾞﾃﾞｨ	1	
-	214T0-50461		BODY,CYL VFM500	ﾎﾞﾃﾞｨ	1	
-	214T0-50471		BODY,CYL VFM550	ﾎﾞﾃﾞｨ	1	
-	214T0-50481		BODY,CYL VFM600	ﾎﾞﾃﾞｨ	1	
2	214T0-50511		ROD,PISTON VFM200	ﾛｯﾄﾞ	1	
-	214T0-50521		ROD,PISTON VFM225	ﾛｯﾄﾞ	1	
-	224T0-80411		ROD,PISTON VFM250	ﾛｯﾄﾞ	1	
-	214T0-50541		ROD,PISTON VFM270	ﾛｯﾄﾞ	1	
-	214T0-50551		ROD,PISTON VFM275	ﾛｯﾄﾞ	1	
-	224T0-80401		ROD,PISTON VFM300	ﾛｯﾄﾞ	1	
-	214T0-50561		ROD,PISTON VFM325	ﾛｯﾄﾞ	1	
-	224T0-80431		ROD,PISTON VFM330	ﾛｯﾄﾞ	1	
-	224T0-80441		ROD,PISTON VFM350	ﾛｯﾄﾞ	1	
-	214T0-50591		ROD,PISTON VFM366	ﾛｯﾄﾞ	1	
-	214T0-50601		ROD,PISTON VFM370	ﾛｯﾄﾞ	1	

FIG.103 LIFT CYLINDER(FRONT) [VFM2Y5]

(M7030510) リフトシリンダ(フロント)

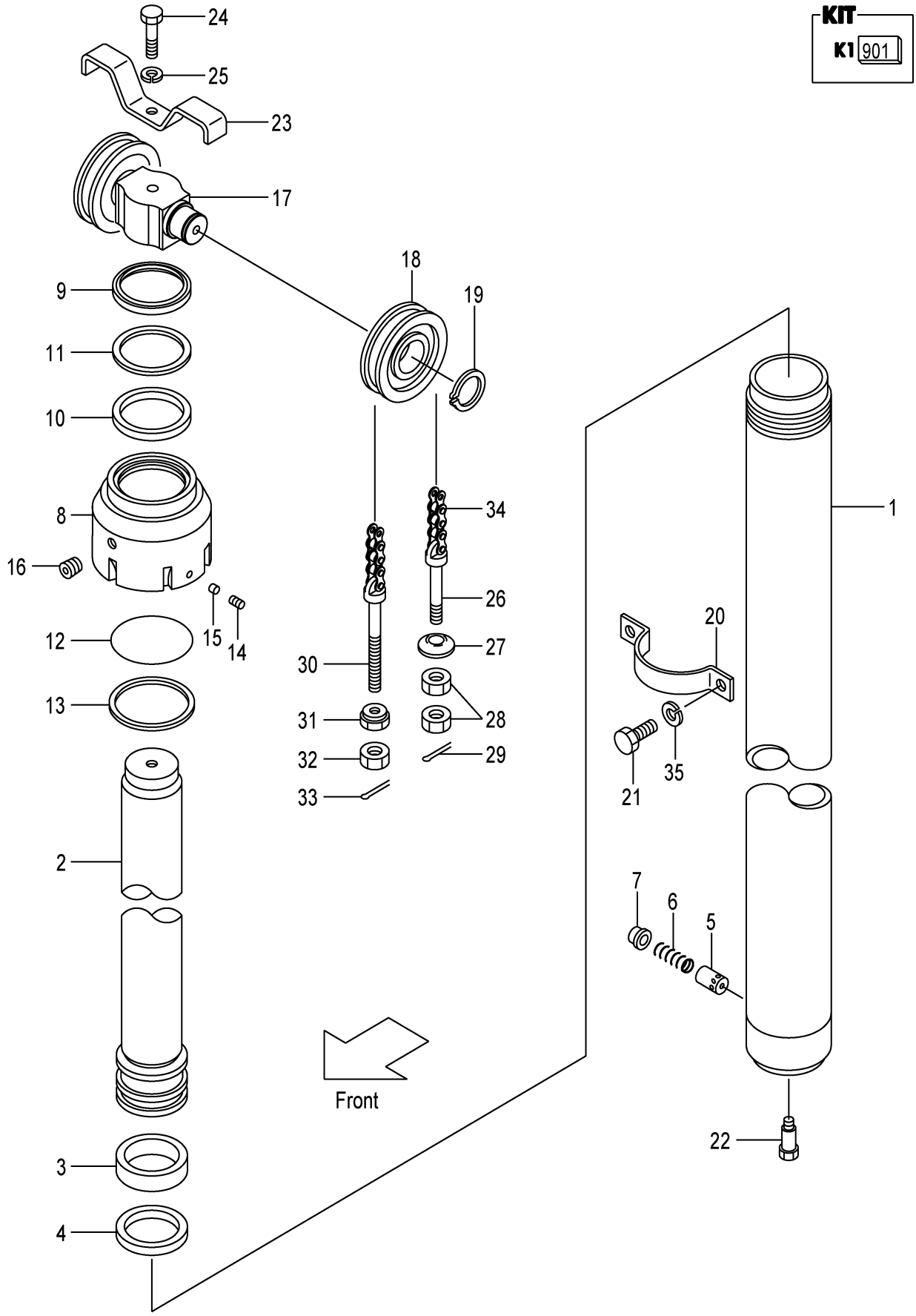

A:VFM2Y5

Item No	Part No.	Mark	Description		Req'd	Remarks : Serial No.
-	214T0-50611		ROD,PISTON VFM375	ﾛｯﾄﾞ	1	
-	214T0-50621		ROD,PISTON VFM400	ﾛｯﾄﾞ	1	
-	214T0-50631		ROD,PISTON VFM425	ﾛｯﾄﾞ	1	
-	214T0-50641		ROD,PISTON VFM450	ﾛｯﾄﾞ	1	
-	214T0-50651		ROD,PISTON VFM475	ﾛｯﾄﾞ	1	
-	214T0-50661		ROD,PISTON VFM500	ﾛｯﾄﾞ	1	
-	214T0-50671		ROD,PISTON VFM550	ﾛｯﾄﾞ	1	
-	214T0-50681		ROD,PISTON VFM600	ﾛｯﾄﾞ	1	
3	22250-52931	*	WEARING	ｳｴｱﾘﾝｸﾞ	1	
4	24230-58491	*	SEAL	ｼｰﾙ	1	
5	24389-46011		PISTON	ﾋﾟｽﾄﾝ	1	
6	224T0-53451		SPRING	ｽﾌﾟﾘﾝｸﾞ	1	
7	24310-82641		RETAINER	ﾘﾃｰﾅ	1	
8	224T0-82501		CAP,CYL	ｷｬｯﾌﾟ	1	
9	224T0-82531	*	SEAL,DUST	ｼｰﾙ	1	
10	224T0-82511	*	PACKING	ﾊﾟｯｷﾝｸﾞ	1	
11	224T0-82521	*	RING,BACK-UP	ﾘﾝｸﾞ	1	
12	03350-01250	*	O-RING	Oﾘﾝｸﾞ	1	
13	224T0-82541	*	RING,BACK-UP	ﾘﾝｸﾞ	1	
14	25908-44101		PLUG	ﾌﾟﾗｸﾞ	1	
15	25908-44111		PLUG,NYLON	ﾌﾟﾗｸﾞ	1	
16	22518-40151		PLUG	ﾌﾟﾗｸﾞ	1	
17	22Y50-83011		HEAD,PISTON	ﾍｯﾄﾞ	1	
18	24609-41242		SHEAVE	ｼｰﾌﾞ	2	
19	02100-00050		RING,SNAP	ﾘﾝｸﾞ	2	
20	224T0-82421		SUPPORT	ｻﾎﾟｰﾄ	1	
21	01103-12025		BOLT	ﾎﾞﾙﾄ	2	
22	224T0-82561		BOLT	ﾎﾞﾙﾄ	1	
23	24600-82291		STOPPER	ｽﾄｯﾊﾟ	1	
24	01103-16085		BOLT	ﾎﾞﾙﾄ	1	
25	02011-00016		WASHER	ﾜｯｼｬ	1	
26	24329-45441		PIN,ANCHOR	ﾋﾟﾝ	2	
27	24319-45751		CONE	ｺｰﾝ	2	
28	01402-00022		NUT	ﾅｯﾄ	4	
29	02200-03040		PIN,COTTER	ﾋﾟﾝ	2	
30	23918-42681		PIN,ANCHOR	ﾋﾟﾝ	2	
31	23818-30271		NUT	ﾅｯﾄ	2	
32	01402-00022		NUT	ﾅｯﾄ	2	
33	02200-03040		PIN,COTTER	ﾋﾟﾝ	2	
34	23918-45471		CHAIN VFM200	ﾁｪｰﾝ	2	
-	23918-45531		CHAIN VFM225	ﾁｪｰﾝ	2	
-	23918-45551		CHAIN VFM250	ﾁｪｰﾝ	2	
-	23918-45591		CHAIN VFM270	ﾁｪｰﾝ	2	
-	23918-45611		CHAIN VFM275	ﾁｪｰﾝ	2	
-	23918-45631		CHAIN VFM300	ﾁｪｰﾝ	2	
-	23918-45691		CHAIN VFM325	ﾁｪｰﾝ	2	
-	23918-45691		CHAIN VFM330	ﾁｪｰﾝ	2	
-	23918-45731		CHAIN VFM350	ﾁｪｰﾝ	2	
-	23918-45771		CHAIN VFM366	ﾁｪｰﾝ	2	
-	23918-45771		CHAIN VFM370	ﾁｪｰﾝ	2	

FIG.103 LIFT CYLINDER(FRONT) [VFM2Y5]

(M7030510) リフトシリンダ(フロント)

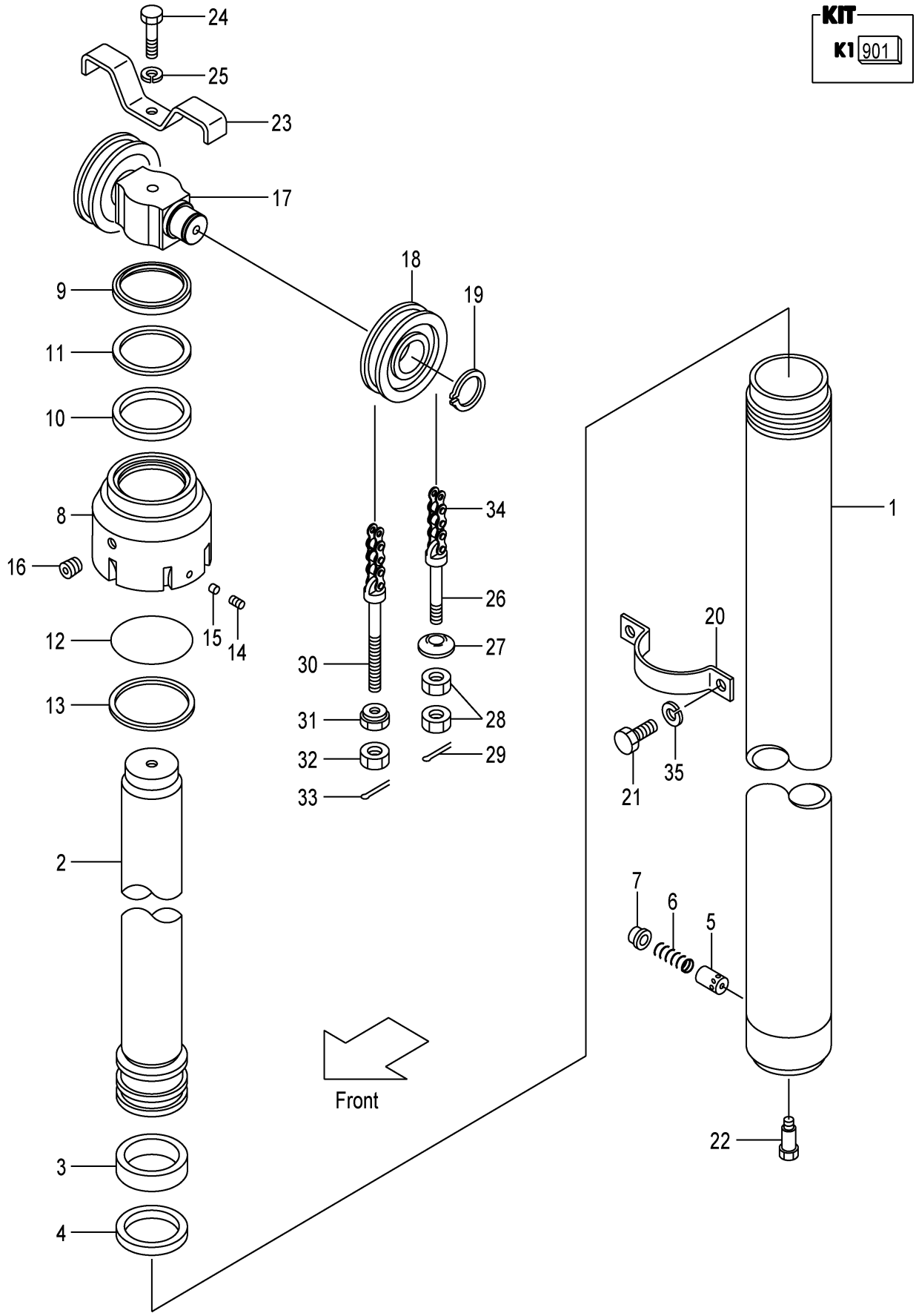

A:VFM2Y5

Item No	Part No.	Mark	Description	Req'd	Remarks : Serial No.
-	23918-45771		CHAIN VFM375 チェーン	2	
-	23918-45851		CHAIN VFM400 チェーン	2	
-	23918-45891		CHAIN VFM425 チェーン	2	
-	23918-45951		CHAIN VFM450 チェーン	2	
-	23918-45991		CHAIN VFM475 チェーン	2	
-	23918-46051		CHAIN VFM500 チェーン	2	
-	23918-46171		CHAIN VFM550 チェーン	2	
-	23918-46271		CHAIN VFM600 チェーン	2	
35	02011-00012		WASHER ワッシャ	2	

FIG.104 LIFT CYLINDER(REAR) [VFM2Y5]

(M7030520) リフトシリンダ(リヤー)

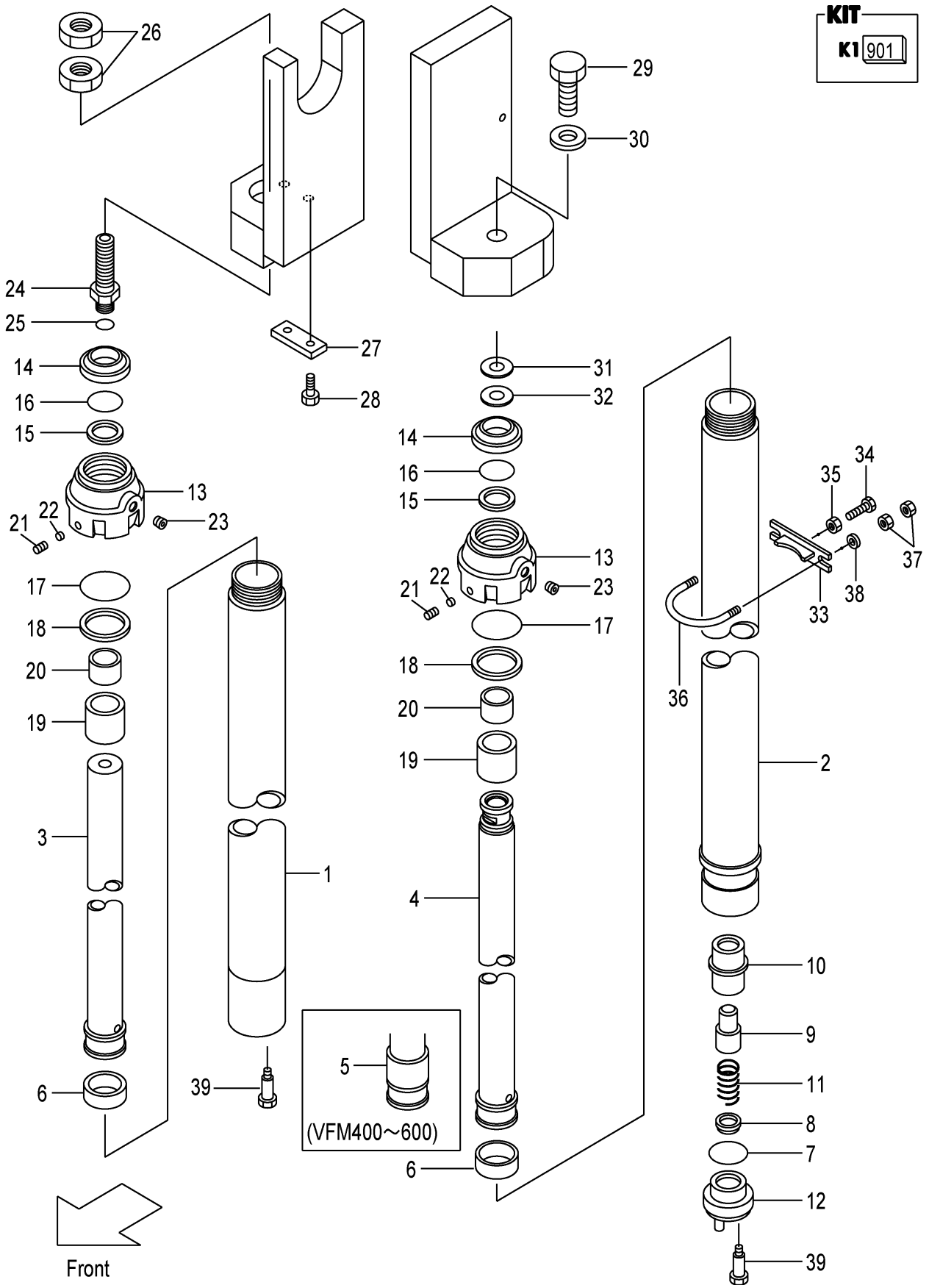

A:VFM2Y5

Item No	Part No.	Mark	Description		Req'd	Remarks : Serial No.
A1	214T0-50911		CYL-ASSY,RH VFM200	ｼﾘﾝﾀﾞｱｯｾﾝ	1	INC.1,3,6,13-28
-	214T0-50921		CYL-ASSY,RH VFM225	ｼﾘﾝﾀﾞｱｯｾﾝ	1	INC.1,3,6,13-28
-	214T0-50931		CYL-ASSY,RH VFM250	ｼﾘﾝﾀﾞｱｯｾﾝ	1	INC.1,3,6,13-28
-	214T0-50941		CYL-ASSY,RH VFM270	ｼﾘﾝﾀﾞｱｯｾﾝ	1	INC.1,3,6,13-28
-	214T0-50951		CYL-ASSY,RH VFM275	ｼﾘﾝﾀﾞｱｯｾﾝ	1	INC.1,3,6,13-28
-	214T0-50901		CYL-ASSY,RH VFM300	ｼﾘﾝﾀﾞｱｯｾﾝ	1	INC.1,3,6,13-28
-	214T0-50961		CYL-ASSY,RH VFM325	ｼﾘﾝﾀﾞｱｯｾﾝ	1	INC.1,3,6,13-28
-	214T0-50971		CYL-ASSY,RH VFM330	ｼﾘﾝﾀﾞｱｯｾﾝ	1	INC.1,3,6,13-28
-	214T0-50981		CYL-ASSY,RH VFM350	ｼﾘﾝﾀﾞｱｯｾﾝ	1	INC.1,3,6,13-28
-	214T0-50991		CYL-ASSY,RH VFM366	ｼﾘﾝﾀﾞｱｯｾﾝ	1	INC.1,3,6,13-28
-	214T0-51001		CYL-ASSY,RH VFM370	ｼﾘﾝﾀﾞｱｯｾﾝ	1	INC.1,3,6,13-28
-	214T0-51011		CYL-ASSY,RH VFM375	ｼﾘﾝﾀﾞｱｯｾﾝ	1	INC.1,3,6,13-28
-	214T0-51021		CYL-ASSY,RH VFM400	ｼﾘﾝﾀﾞｱｯｾﾝ	1	INC.1,3,5,6,13-28
-	214T0-51031		CYL-ASSY,RH VFM425	ｼﾘﾝﾀﾞｱｯｾﾝ	1	INC.1,3,5,6,13-28
-	214T0-51041		CYL-ASSY,RH VFM450	ｼﾘﾝﾀﾞｱｯｾﾝ	1	INC.1,3,5,6,13-28
-	214T0-51051		CYL-ASSY,RH VFM475	ｼﾘﾝﾀﾞｱｯｾﾝ	1	INC.1,3,5,6,13-28
-	214T0-51061		CYL-ASSY,RH VFM500	ｼﾘﾝﾀﾞｱｯｾﾝ	1	INC.1,3,5,6,13-28
-	214T0-51071		CYL-ASSY,RH VFM550	ｼﾘﾝﾀﾞｱｯｾﾝ	1	INC.1,3,5,6,13-28
-	214T0-51081		CYL-ASSY,RH VFM600	ｼﾘﾝﾀﾞｱｯｾﾝ	1	INC.1,3,5,6,13-28
A2	214T0-50711		CYL-ASSY,LH VFM200	ｼﾘﾝﾀﾞｱｯｾﾝ	1	INC.2,4,6-23
-	214T0-50721		CYL-ASSY,LH VFM225	ｼﾘﾝﾀﾞｱｯｾﾝ	1	INC.2,4,6-23
-	214T0-50731		CYL-ASSY,LH VFM250	ｼﾘﾝﾀﾞｱｯｾﾝ	1	INC.2,4,6-23
-	214T0-50741		CYL-ASSY,LH VFM270	ｼﾘﾝﾀﾞｱｯｾﾝ	1	INC.2,4,6-23
-	214T0-50751		CYL-ASSY,LH VFM275	ｼﾘﾝﾀﾞｱｯｾﾝ	1	INC.2,4,6-23
-	214T0-50701		CYL-ASSY,LH VFM300	ｼﾘﾝﾀﾞｱｯｾﾝ	1	INC.2,4,6-23
-	214T0-50761		CYL-ASSY,LH VFM325	ｼﾘﾝﾀﾞｱｯｾﾝ	1	INC.2,4,6-23
-	214T0-50771		CYL-ASSY,LH VFM330	ｼﾘﾝﾀﾞｱｯｾﾝ	1	INC.2,4,6-23
-	214T0-50781		CYL-ASSY,LH VFM350	ｼﾘﾝﾀﾞｱｯｾﾝ	1	INC.2,4,6-23
-	214T0-50791		CYL-ASSY,LH VFM366	ｼﾘﾝﾀﾞｱｯｾﾝ	1	INC.2,4,6-23
-	214T0-50801		CYL-ASSY,LH VFM370	ｼﾘﾝﾀﾞｱｯｾﾝ	1	INC.2,4,6-23
-	214T0-50811		CYL-ASSY,LH VFM375	ｼﾘﾝﾀﾞｱｯｾﾝ	1	INC.2,4,6-23
-	214T0-50821		CYL-ASSY,LH VFM400	ｼﾘﾝﾀﾞｱｯｾﾝ	1	INC.2,4-23
-	214T0-50831		CYL-ASSY,LH VFM425	ｼﾘﾝﾀﾞｱｯｾﾝ	1	INC.2,4-23
-	214T0-50841		CYL-ASSY,LH VFM450	ｼﾘﾝﾀﾞｱｯｾﾝ	1	INC.2,4-23
-	214T0-50851		CYL-ASSY,LH VFM475	ｼﾘﾝﾀﾞｱｯｾﾝ	1	INC.2,4-23
-	214T0-50861		CYL-ASSY,LH VFM500	ｼﾘﾝﾀﾞｱｯｾﾝ	1	INC.2,4-23
-	214T0-50871		CYL-ASSY,LH VFM550	ｼﾘﾝﾀﾞｱｯｾﾝ	1	INC.2,4-23
-	214T0-50881		CYL-ASSY,LH VFM600	ｼﾘﾝﾀﾞｱｯｾﾝ	1	INC.2,4-23
901	224T0-59811	K1	KIT,OVERHAUL	ｵｰﾊﾞﾎｰﾙｷｯﾄ	1	INC.6,7,14-18,25
1	214T0-51311		BODY,CYL,RH VFM200	ﾎﾞﾃﾞｨ	1	
-	214T0-51321		BODY,CYL,RH VFM225	ﾎﾞﾃﾞｨ	1	
-	214T0-51331		BODY,CYL,RH VFM250	ﾎﾞﾃﾞｨ	1	
-	214T0-51341		BODY,CYL,RH VFM270	ﾎﾞﾃﾞｨ	1	
-	214T0-51351		BODY,CYL,RH VFM275	ﾎﾞﾃﾞｨ	1	
-	214T0-51301		BODY,CYL,RH VFM300	ﾎﾞﾃﾞｨ	1	
-	214T0-51361		BODY,CYL,RH VFM325	ﾎﾞﾃﾞｨ	1	
-	214T0-51371		BODY,CYL,RH VFM330	ﾎﾞﾃﾞｨ	1	
-	214T0-51381		BODY,CYL,RH VFM350	ﾎﾞﾃﾞｨ	1	
-	214T0-51391		BODY,CYL,RH VFM366	ﾎﾞﾃﾞｨ	1	
-	214T0-51401		BODY,CYL,RH VFM370	ﾎﾞﾃﾞｨ	1	

FIG.104 LIFT CYLINDER(REAR) [VFM2Y5]

(M7030520) リフトシリンダ(リヤー)

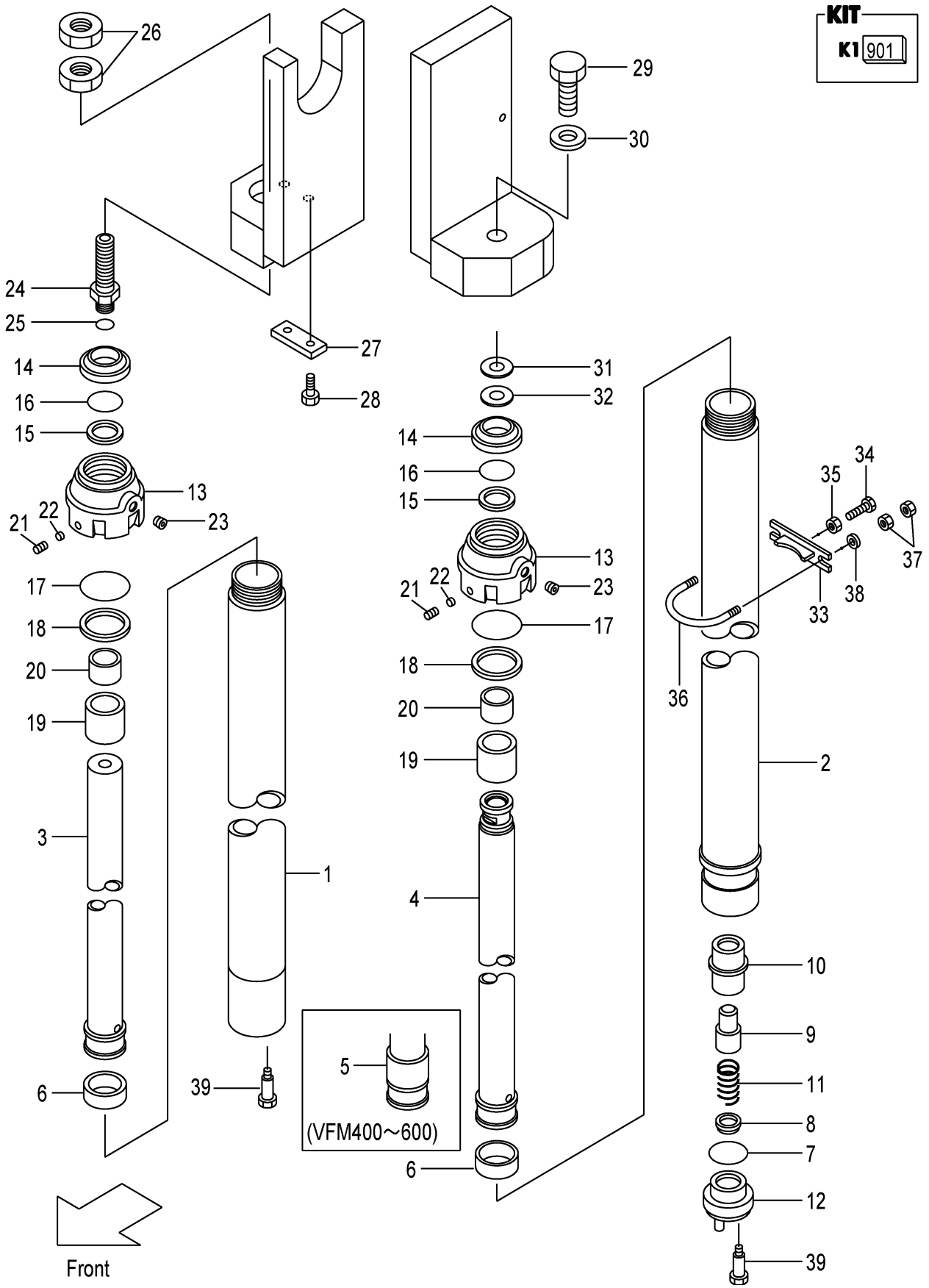

A:VFM2Y5

Item No	Part No.	Mark	Description	Req'd	Remarks : Serial No.
-	214T0-51411		BODY,CYL,RH VFM375 ﾎﾞﾃﾞｨ	1	
-	214T0-51421		BODY,CYL,RH VFM400 ﾎﾞﾃﾞｨ	1	
-	214T0-51431		BODY,CYL,RH VFM425 ﾎﾞﾃﾞｨ	1	
-	214T0-51441		BODY,CYL,RH VFM450 ﾎﾞﾃﾞｨ	1	
-	214T0-51451		BODY,CYL,RH VFM475 ﾎﾞﾃﾞｨ	1	
-	214T0-51461		BODY,CYL,RH VFM500 ﾎﾞﾃﾞｨ	1	
-	214T0-51471		BODY,CYL,RH VFM550 ﾎﾞﾃﾞｨ	1	
-	214T0-51481		BODY,CYL,RH VFM600 ﾎﾞﾃﾞｨ	1	
2	214T0-51111		BODY,CYL,LH VFM200 ﾎﾞﾃﾞｨ	1	
-	214T0-51121		BODY,CYL,LH VFM225 ﾎﾞﾃﾞｨ	1	
-	214T0-51131		BODY,CYL,LH VFM250 ﾎﾞﾃﾞｨ	1	
-	214J0-81222		BODY,CYL,LH VFM270 ﾎﾞﾃﾞｨ	1	
-	214T0-51151		BODY,CYL,LH VFM275 ﾎﾞﾃﾞｨ	1	
-	214T0-51101		BODY,CYL,LH VFM300 ﾎﾞﾃﾞｨ	1	
-	214T0-51161		BODY,CYL,LH VFM325 ﾎﾞﾃﾞｨ	1	
-	214T0-51171		BODY,CYL,LH VFM330 ﾎﾞﾃﾞｨ	1	
-	214T0-51181		BODY,CYL,LH VFM350 ﾎﾞﾃﾞｨ	1	
-	214T0-51191		BODY,CYL,LH VFM366 ﾎﾞﾃﾞｨ	1	
-	214T0-51201		BODY,CYL,LH VFM370 ﾎﾞﾃﾞｨ	1	
-	214T0-51211		BODY,CYL,LH VFM375 ﾎﾞﾃﾞｨ	1	
-	214T0-51221		BODY,CYL,LH VFM400 ﾎﾞﾃﾞｨ	1	
-	214T0-51231		BODY,CYL,LH VFM425 ﾎﾞﾃﾞｨ	1	
-	214T0-51241		BODY,CYL,LH VFM450 ﾎﾞﾃﾞｨ	1	
-	214T0-51251		BODY,CYL,LH VFM475 ﾎﾞﾃﾞｨ	1	
-	214T0-51261		BODY,CYL,LH VFM500 ﾎﾞﾃﾞｨ	1	
-	214T0-51271		BODY,CYL,LH VFM550 ﾎﾞﾃﾞｨ	1	
-	214T0-51281		BODY,CYL,LH VFM600 ﾎﾞﾃﾞｨ	1	
3	214T0-51711		ROD,PISTON,RH VFM200 ﾛｯﾄﾞ	1	
-	214T0-51721		ROD,PISTON,RH VFM225 ﾛｯﾄﾞ	1	
-	214T0-51731		ROD,PISTON,RH VFM250 ﾛｯﾄﾞ	1	
-	214T0-51741		ROD,PISTON,RH VFM270 ﾛｯﾄﾞ	1	
-	214T0-51751		ROD,PISTON,RH VFM275 ﾛｯﾄﾞ	1	
-	214T0-51701		ROD,PISTON,RH VFM300 ﾛｯﾄﾞ	1	
-	214T0-51761		ROD,PISTON,RH VFM325 ﾛｯﾄﾞ	1	
-	214T0-51771		ROD,PISTON,RH VFM330 ﾛｯﾄﾞ	1	
-	214T0-51781		ROD,PISTON,RH VFM350 ﾛｯﾄﾞ	1	
-	214T0-51791		ROD,PISTON,RH VFM366 ﾛｯﾄﾞ	1	
-	214T0-51801		ROD,PISTON,RH VFM370 ﾛｯﾄﾞ	1	
-	214T0-51811		ROD,PISTON,RH VFM375 ﾛｯﾄﾞ	1	
-	214T0-51821		ROD,PISTON,RH VFM400 ﾛｯﾄﾞ	1	
-	214T0-51831		ROD,PISTON,RH VFM425 ﾛｯﾄﾞ	1	
-	214T0-51841		ROD,PISTON,RH VFM450 ﾛｯﾄﾞ	1	
-	214T0-51851		ROD,PISTON,RH VFM475 ﾛｯﾄﾞ	1	
-	214T0-51861		ROD,PISTON,RH VFM500 ﾛｯﾄﾞ	1	
-	214T0-51871		ROD,PISTON,RH VFM550 ﾛｯﾄﾞ	1	
-	214T0-51881		ROD,PISTON,RH VFM600 ﾛｯﾄﾞ	1	
4	214T0-51511		ROD,PISTON,LH VFM200 ﾛｯﾄﾞ	1	
-	214T0-51521		ROD,PISTON,LH VFM225 ﾛｯﾄﾞ	1	
-	214T0-51531		ROD,PISTON,LH VFM250 ﾛｯﾄﾞ	1	
-	214T0-51541		ROD,PISTON,LH VFM270 ﾛｯﾄﾞ	1	

FIG.104 LIFT CYLINDER(REAR) [VFM2Y5]

(M7030520) リフトシリンダ(リヤー)

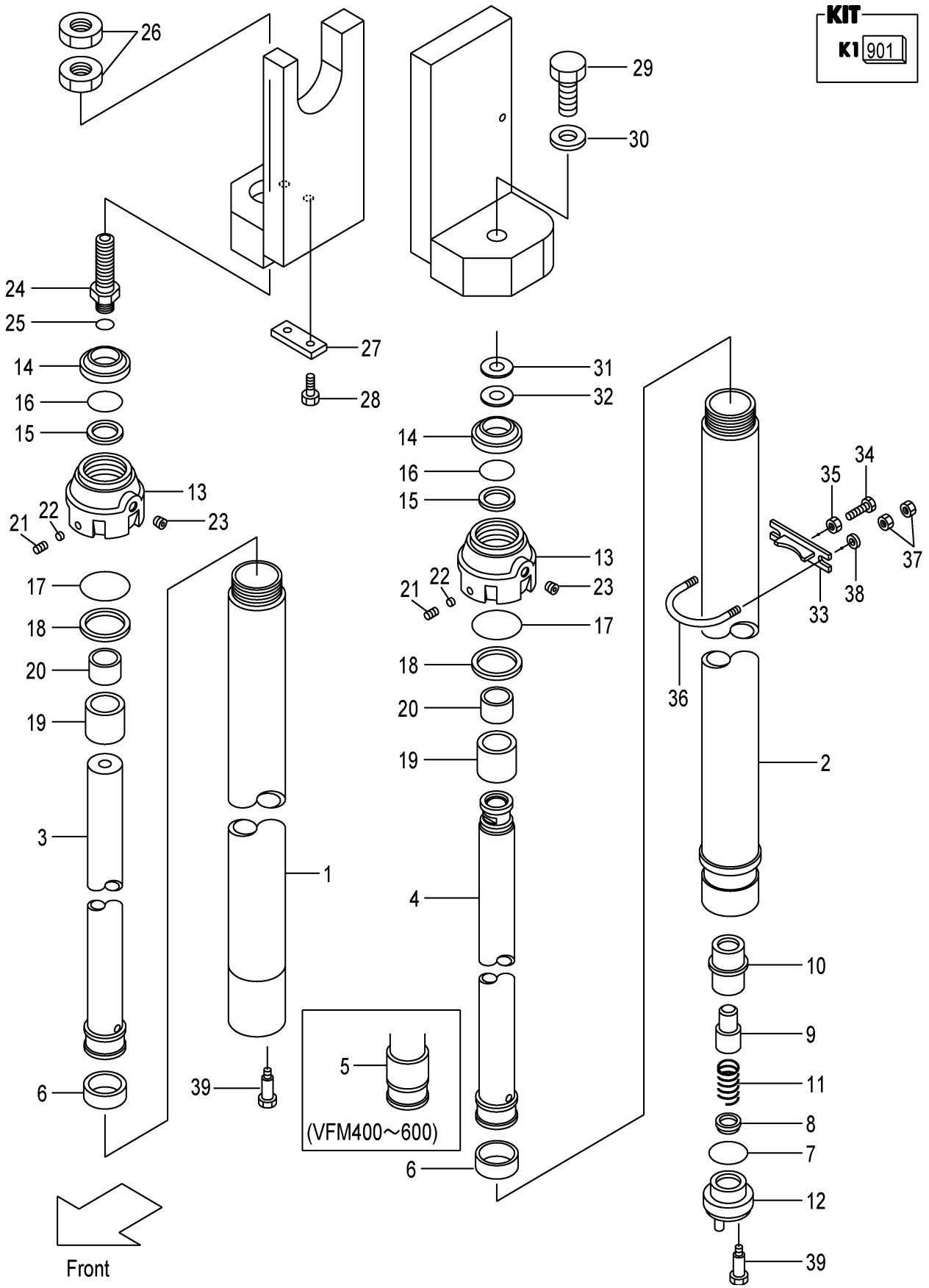

A:VFM2Y5

Item No	Part No.	Mark	Description		Req'd	Remarks : Serial No.
-	214T0-51551		ROD,PISTON,LH VFM275	ﾛｯﾄﾞ	1	
-	214T0-51501		ROD,PISTON,LH VFM300	ﾛｯﾄﾞ	1	
-	214T0-51561		ROD,PISTON,LH VFM325	ﾛｯﾄﾞ	1	
-	214T0-51571		ROD,PISTON,LH VFM330	ﾛｯﾄﾞ	1	
-	214T0-51581		ROD,PISTON,LH VFM350	ﾛｯﾄﾞ	1	
-	214T0-51591		ROD,PISTON,LH VFM366	ﾛｯﾄﾞ	1	
-	214T0-51601		ROD,PISTON,LH VFM370	ﾛｯﾄﾞ	1	
-	214T0-51611		ROD,PISTON,LH VFM375	ﾛｯﾄﾞ	1	
-	214T0-51621		ROD,PISTON,LH VFM400	ﾛｯﾄﾞ	1	
-	214T0-51631		ROD,PISTON,LH VFM425	ﾛｯﾄﾞ	1	
-	214T0-51641		ROD,PISTON,LH VFM450	ﾛｯﾄﾞ	1	
-	214T0-51651		ROD,PISTON,LH VFM475	ﾛｯﾄﾞ	1	
-	214T0-51661		ROD,PISTON,LH VFM500	ﾛｯﾄﾞ	1	
-	214T0-51671		ROD,PISTON,LH VFM550	ﾛｯﾄﾞ	1	
-	214T0-51681		ROD,PISTON,LH VFM600	ﾛｯﾄﾞ	1	
5	224T0-53401		SPACER	ｽﾍﾟｰｻ	2	(VFM400-500)
-	224T0-53401		SPACER	ｽﾍﾟｰｻ	4	(VFM550-600)
6	27978-42421	*	WEARING	ｳｴｱﾘﾝｸﾞ	2	
7	03320-00340	*	O-RING	Oﾘﾝｸﾞ	1	(LH)
8	53658-43001		VALVE,CHECK	ﾊﾞﾙﾌﾞ	1	(LH)
9	53658-43011		PISTON	ﾋﾟｽﾄﾝ	1	(LH)
10	53658-43021		SLEEVE	ｽﾘｰﾌﾞ	1	(LH)
11	53658-43031		SPRING	ｽﾌﾟﾘﾝｸﾞ	1	(LH)
12	53658-43041		PLUG	ﾌﾟﾗｸﾞ	1	(LH)
13	224T0-53011		CAP,CYL	ｷｬｯﾌﾟ	2	
14	214J8-46001	*	SEAL,DUST	ｼｰﾙ	2	
15	22570-53201	*	PACKING	ﾊﾟｯｷﾝｸﾞ	2	
16	24459-42291	*	RING,BACK-UP	ﾘﾝｸﾞ	2	
17	214J8-42581	*	O-RING	Oﾘﾝｸﾞ	2	
18	224T0-53031	*	RING,BACK-UP	ﾘﾝｸﾞ	2	
19	214J8-42472		SLEEVE	ｽﾘｰﾌﾞ	2	
20	214J8-42561		BUSHING	ﾌﾞｯｼﾝｸﾞ	2	
21	25908-44101		PLUG	ﾌﾟﾗｸﾞ	2	
22	25908-44111		PLUG,NYLON	ﾌﾟﾗｸﾞ	2	
23	23870-52871		PLUG	ﾌﾟﾗｸﾞ	4	
24	224T0-53301		NIPPLE	ﾆｯﾌﾟﾙ	1	(RH)
25	03320-00240	*	O-RING	Oﾘﾝｸﾞ	1	(RH)
26	224T0-53311		NUT	ﾅｯﾄ	2	(RH)
27	23648-50161		PLATE,KEY	ﾌﾟﾚｰﾄ	1	(RH)
28	01184-10020		BOLT & WASHER	ﾎﾞﾙﾄ&ﾜｯｼｬ	2	(RH)
29	01103-16045		BOLT	ﾎﾞﾙﾄ	1	(LH)
30	02011-00016		WASHER	ﾜｯｼｬ	1	(LH)
31	211F8-22261		SHIM,T-0.5	ｼﾑ	4	(LH)
32	211F8-22271		SHIM,T-1.0	ｼﾑ	6	(LH)
33	22N58-43011		SUPPORT	ｻﾎﾟｰﾄ	2	(VFM200-375)
-	22N58-43011		SUPPORT	ｻﾎﾟｰﾄ	4	(VFM400-600)
34	01120-12040		BOLT	ﾎﾞﾙﾄ	2	(VFM200-375)
-	01120-12040		BOLT	ﾎﾞﾙﾄ	4	(VFM400-600)
35	01400-00012		NUT	ﾅｯﾄ	2	(VFM200-375)
-	01400-00012		NUT	ﾅｯﾄ	4	(VFM400-600)

FIG.104 LIFT CYLINDER(REAR) [VFM2Y5]

(M7030520) リフトシリンダ(リヤー)

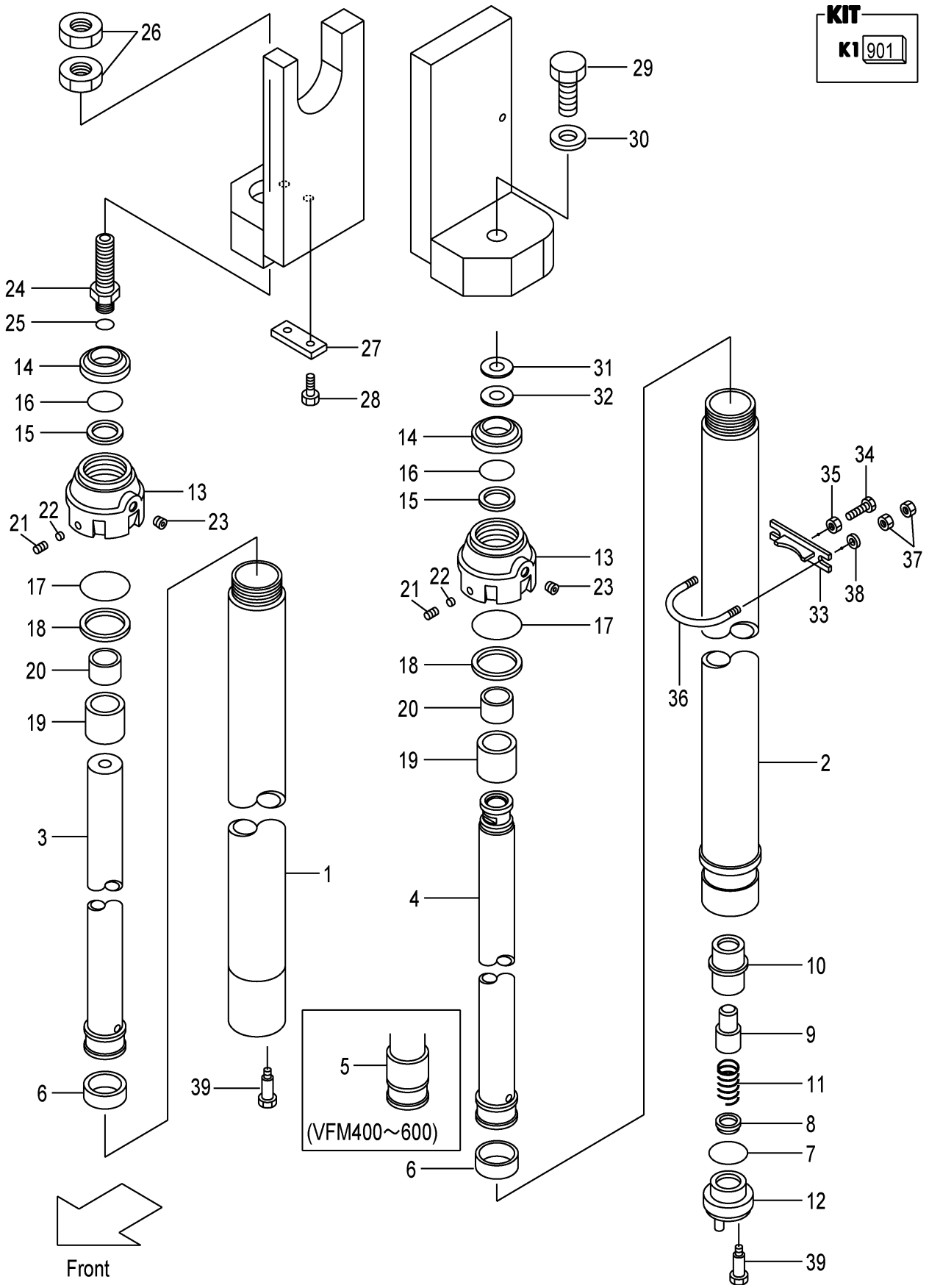

A:VFM2Y5

Item No	Part No.	Mark	Description		Req'd	Remarks : Serial No.
36	234A8-42551		U-BOLT	Uﾎﾞﾙﾄ	2	(VFM200-375)
-	234A8-42551		U-BOLT	Uﾎﾞﾙﾄ	4	(VFM400-600)
37	01402-00010		NUT	ﾅｯﾄ	8	(VFM200-375)
-	01402-00010		NUT	ﾅｯﾄ	16	(VFM400-600)
38	02000-00010		WASHER	ﾜｯｼｬ	4	(VFM200-375)
-	02000-00010		WASHER	ﾜｯｼｬ	8	(VFM400-600)
39	214A0-82831		BOLT	ﾎﾞﾙﾄ	2	

FIG.105 MAST PIPING [VFM2Y5]

(M7030530) マストパイピング

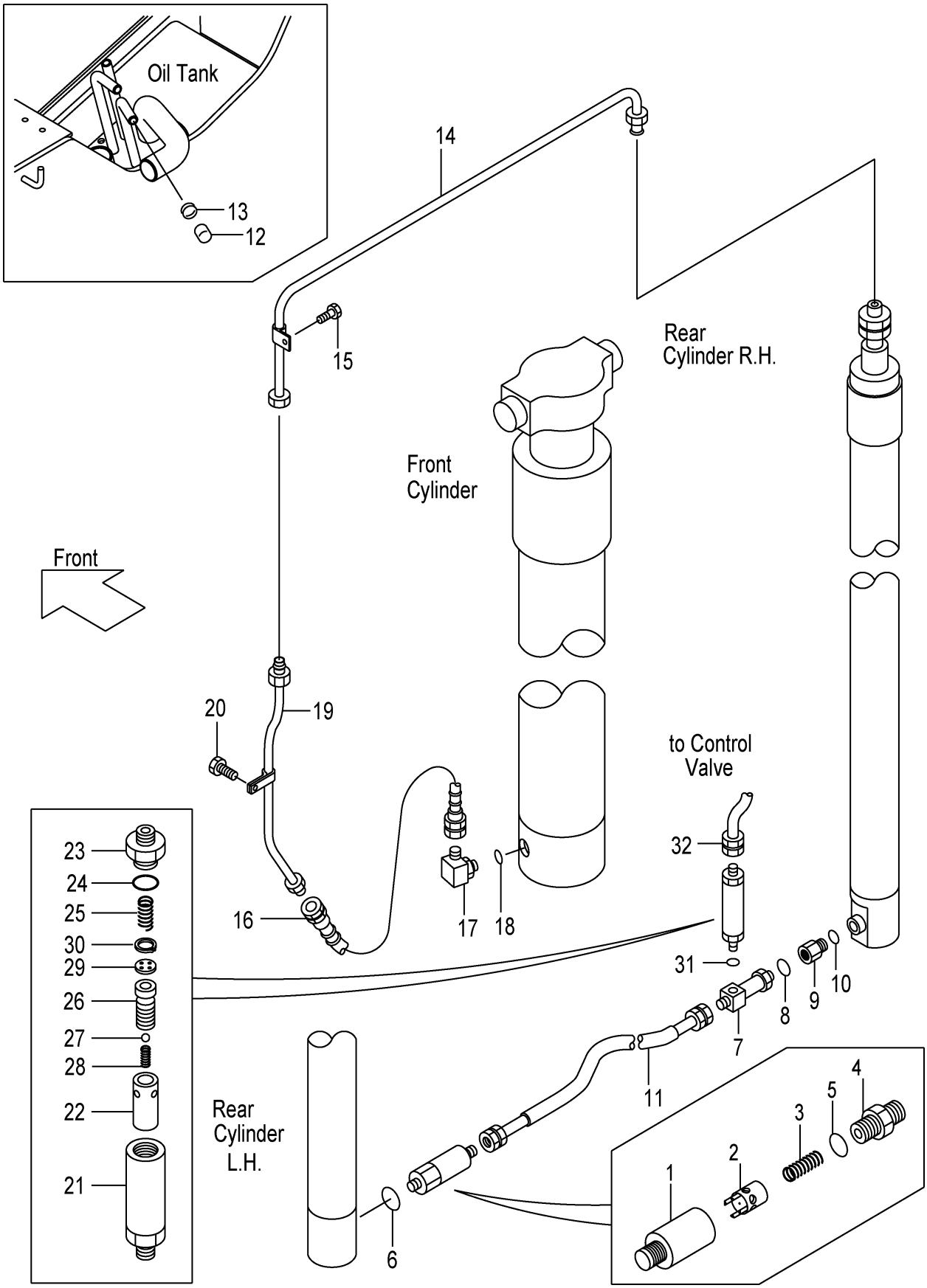

A:VFM2Y5

Item No	Part No.	Mark	Description		Req'd	Remarks : Serial No.
A1	214T0-62202		VALVE-ASSY,CUT	ｶｯﾄﾊﾞﾙﾌﾞｱｯｾﾝ	1	INC.1-5
1	NO PART NO.	#	CASE	ｹｰｽ	1	
2	NO PART NO.	#	PISTON	ﾋﾟｽﾄﾝ	1	
3	24230-52701		SPRING	ｽﾌﾟﾘﾝｸﾞ	1	
A2	214T0-53501		NIPPLE-ASSY	ﾆｯﾌﾟﾙｱｯｾﾝ	1	INC.4,5
4	NO PART NO.	#	NIPPLE	ﾆｯﾌﾟﾙ	1	
5	03320-00180		O-RING	Oﾘﾝｸﾞ	1	
6	03320-00180		O-RING	Oﾘﾝｸﾞ	1	
A3	23659-44602		THREE-WAY-ASSY	ｽﾘｰｳｪｲｱｯｾﾝ	1	INC.7,8
7	NO PART NO.	#	THREE-WAY	ｽﾘｰｳｴｲ	1	
8	03320-00180		O-RING	Oﾘﾝｸﾞ	1	
A4	228C0-91011		NIPPLE-ASSY	ﾆｯﾌﾟﾙｱｯｾﾝ	1	INC.9,10
9	228C0-92281	#	NIPPLE	ﾆｯﾌﾟﾙ	1	
10	03320-00180		O-RING	Oﾘﾝｸﾞ	1	
11	22Y58-42101		HOSE	ﾎｰｽ	1	
12	55593-62551		CAP	ｷｬｯﾌﾟ	1	
13	04914-00019		CLIP	ｸﾘｯﾌﾟ	1	
14	22Y50-62301		PIPE	ﾊﾟｲﾌﾟ	1	
15	01184-08018		BOLT	ﾎﾞﾙﾄ	1	
16	214T0-62251		HOSE	ﾎｰｽ	1	
A5	24320-58521		ELBOW-ASSY	ｴﾙﾎﾞｱｯｾﾝ	1	INC.17,18
17	NO PART NO.	#	ELBOW	ｴﾙﾎﾞ	1	
18	03320-00240		O-RING	Oﾘﾝｸﾞ	1	
19	214T0-60111		PIPE VFM200	ﾊﾟｲﾌﾟ	1	
-	214T0-60121		PIPE VFM225	ﾊﾟｲﾌﾟ	1	
-	214T0-60131		PIPE VFM250	ﾊﾟｲﾌﾟ	1	
-	214T0-60141		PIPE VFM270	ﾊﾟｲﾌﾟ	1	
-	214T0-60151		PIPE VFM275	ﾊﾟｲﾌﾟ	1	
-	214T0-60101		PIPE VFM300	ﾊﾟｲﾌﾟ	1	
-	214T0-60161		PIPE VFM325	ﾊﾟｲﾌﾟ	1	
-	214T0-60171		PIPE VFM330	ﾊﾟｲﾌﾟ	1	
-	224T0-60171		PIPE VFM350	ﾊﾟｲﾌﾟ	1	
-	214T0-60191		PIPE VFM366	ﾊﾟｲﾌﾟ	1	
-	214T0-60201		PIPE VFM370	ﾊﾟｲﾌﾟ	1	
-	214T0-60211		PIPE VFM375	ﾊﾟｲﾌﾟ	1	
-	214T0-60221		PIPE VFM400	ﾊﾟｲﾌﾟ	1	
-	214T0-60231		PIPE VFM425	ﾊﾟｲﾌﾟ	1	
-	214T0-60241		PIPE VFM450	ﾊﾟｲﾌﾟ	1	
-	214T0-60251		PIPE VFM475	ﾊﾟｲﾌﾟ	1	
-	214T0-60261		PIPE VFM500	ﾊﾟｲﾌﾟ	1	
-	214T0-60271		PIPE VFM550	ﾊﾟｲﾌﾟ	1	
-	214T0-60281		PIPE VFM600	ﾊﾟｲﾌﾟ	1	
20	01184-08018		BOLT	ﾎﾞﾙﾄ	1	
A6	22Y58-41001		REGULATOR-ASSY	ﾚｷﾞｭﾚｰﾀｱｯｾﾝ	1	INC.21-30
21	NO PART NO.	#	CASE	ｹｰｽ	1	
22	NO PART NO.	#	SLEEVE	ｽﾘｰﾌﾞ	1	
23	NO PART NO.	#	NIPPLE	ﾆｯﾌﾟﾙ	1	
24	03320-00280		O-RING	Oﾘﾝｸﾞ	1	
25	27979-43101		SPRING	ｽﾌﾟﾘﾝｸﾞ	2	
26	NO PART NO.	#	PISTON	ﾋﾟｽﾄﾝ	1	

FIG.105 MAST PIPING [VFM2Y5]

(M7030530) マストパイピング

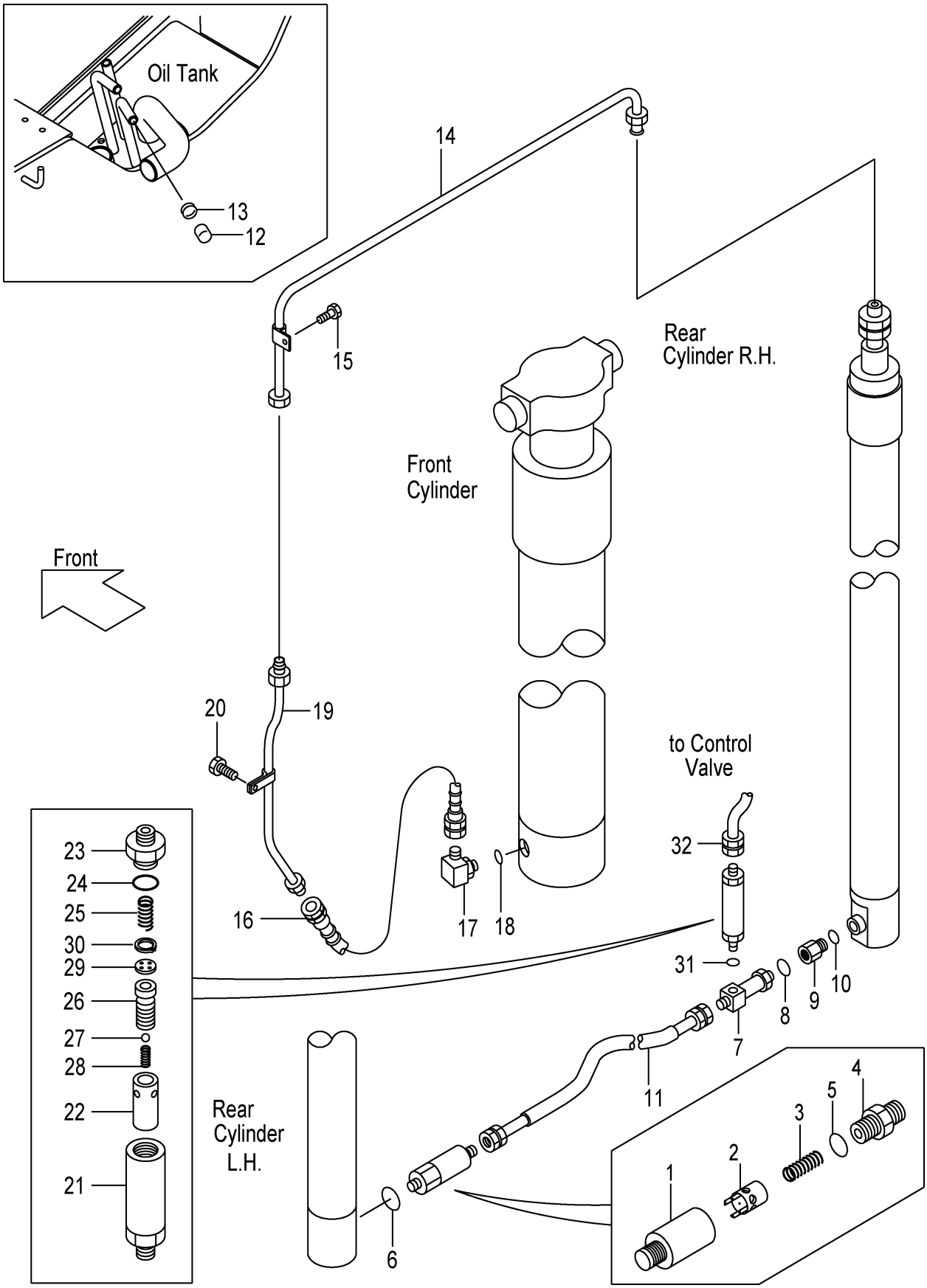

A:VFM2Y5

Item No	Part No.	Mark	Description		Req'd	Remarks : Serial No.
27	24459-42951		BALL,NYLON	ﾎﾞｰﾙ	1	
28	214A8-44151		SPRING	ｽﾌﾟﾘﾝｸﾞ	1	
29	NO PART NO.	#	PLATE	ﾌﾟﾚｰﾄ	1	
30	02110-00018		RING,SNAP	ﾘﾝｸﾞ	1	
31	03320-00180		O-RING	Oﾘﾝｸﾞ	1	
32	234A8-02101		HOSE	ﾎｰｽ	1	

FIG.106 FORK [VFHM2Y5]

(M7038130) フォーク

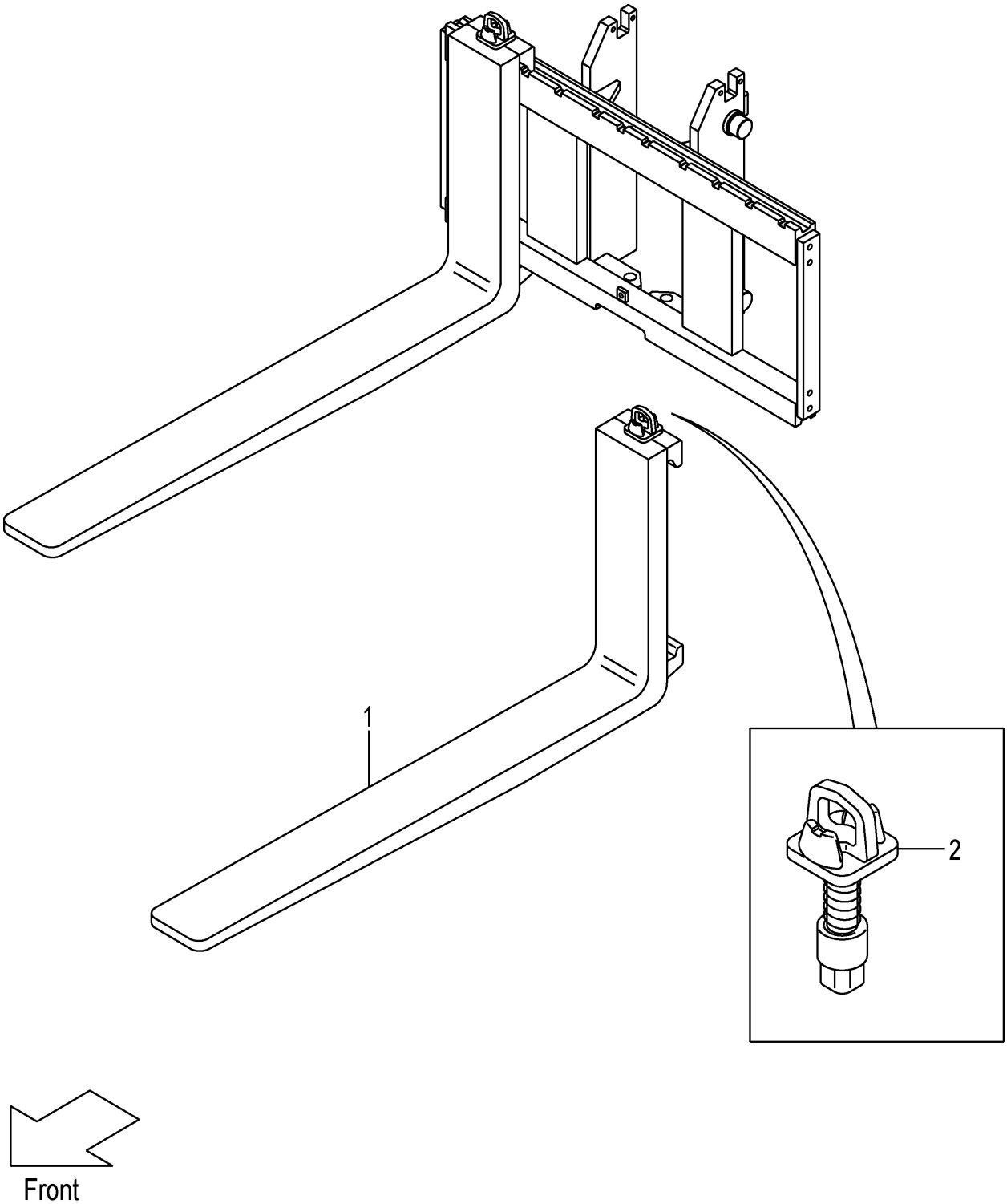

A:VFHM2Y5

Item No	Part No.	Mark	Description		Req'd	Remarks : Serial No.
1	24328-10514		FORK	ﾌｫｰｸ	2	(L=1070)
-	24328-10503		FORK	ﾌｫｰｸ	2	[LF100] INC.2
-	24328-10514		FORK	ﾌｫｰｸ	2	[LF107] INC.2
-	24328-10523		FORK	ﾌｫｰｸ	2	[LF110] INC.2
-	24328-10533		FORK	ﾌｫｰｸ	2	[LF120] INC.2
-	24328-10544		FORK	ﾌｫｰｸ	2	[LF122] INC.2
-	24328-12304		FORK	ﾌｫｰｸ	2	[LF130] INC.2
-	24328-10554		FORK	ﾌｫｰｸ	2	[LF137] INC.2
-	24328-12314		FORK	ﾌｫｰｸ	2	[LF140] INC.2
-	24328-12324		FORK	ﾌｫｰｸ	2	[LF150] INC.2
-	24328-10564		FORK	ﾌｫｰｸ	2	[LF152] INC.2
-	24328-12334		FORK	ﾌｫｰｸ	2	[LF160] INC.2
-	24328-10574		FORK	ﾌｫｰｸ	2	[LF167] INC.2
-	24328-12344		FORK	ﾌｫｰｸ	2	[LF170] INC.2
-	24328-12354		FORK	ﾌｫｰｸ	2	[LF180] INC.2
-	24328-10584		FORK	ﾌｫｰｸ	2	[LF182] INC.2
-	24328-12364		FORK	ﾌｫｰｸ	2	[LF190] INC.2
-	24328-10594		FORK	ﾌｫｰｸ	2	[LF197] INC.2
-	24328-12374		FORK	ﾌｫｰｸ	2	[LF200] INC.2
-	24328-12384		FORK	ﾌｫｰｸ	2	[LF210] INC.2
-	24328-10604		FORK	ﾌｫｰｸ	2	[LF212] INC.2
2	214J8-11002		STOPPER,FORK	ｽﾄｯﾊﾟ	2	

FIG.107 LIFT BRACKET [VFHM2Y5]

(M7030910) ﾘﾌﾄﾌﾞﾗｹｯﾄ

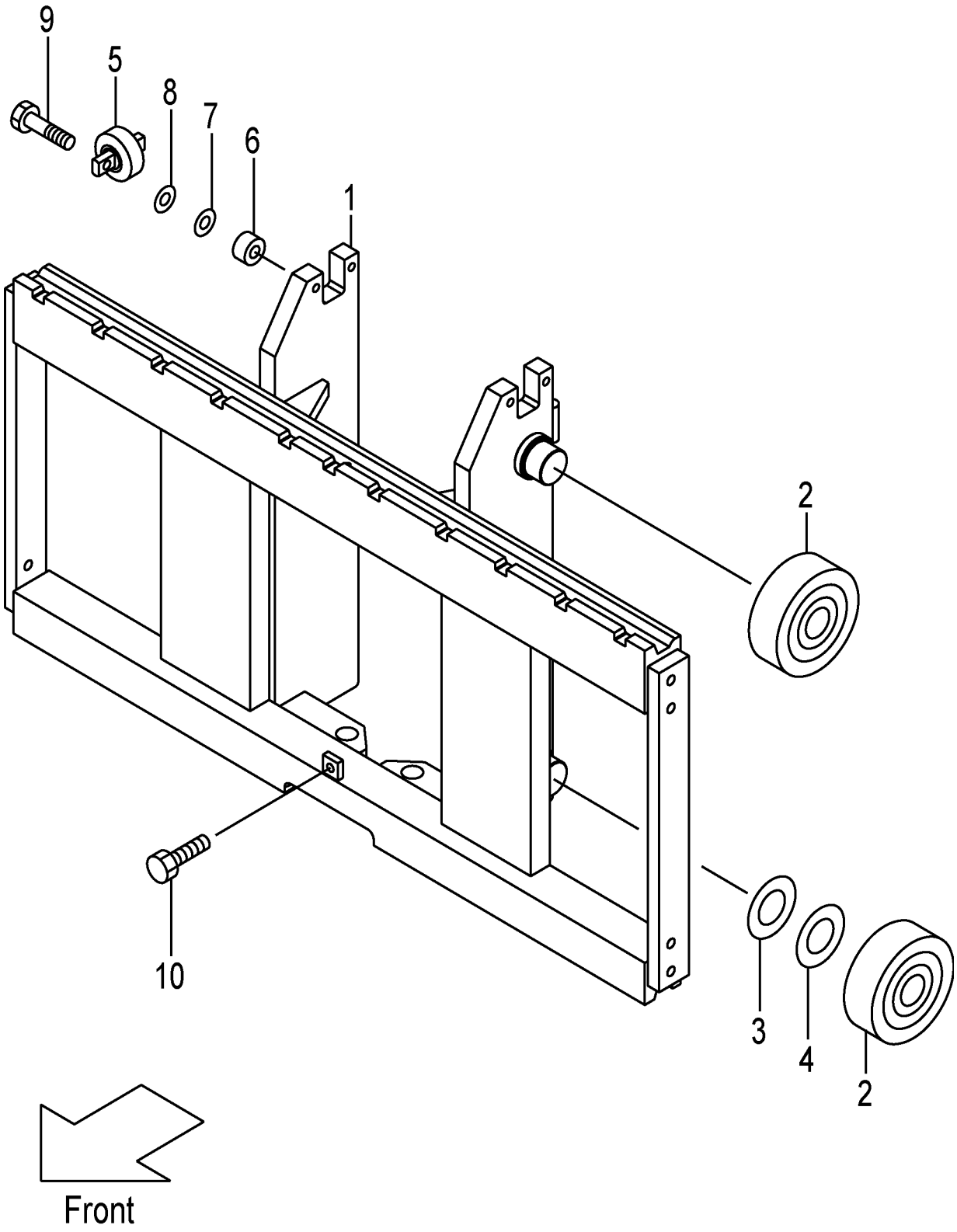

A:VFHM2Y5

Item No	Part No.	Mark	Description		Req'd	Remarks : Serial No.
1	22Y50-90201		BRACKET,LIFT	ﾌﾞﾗｹｯﾄ	1	
2	277P8-22051		ROLLER,END,119.0	ﾛｰﾗ	4	
-	277P8-22061		ROLLER,END,119.5	ﾛｰﾗ	(4)	
3	277P8-22071		SHIM,T-0.5	ｼﾑ	5	
4	277P8-22081		SHIM,T-1.0	ｼﾑ	5	
5	22N58-32701		ROLLER,SIDE	ﾛｰﾗ	2	
6	22N58-32711		SPACER	ｽﾍﾟｰｻ	4	
7	22018-30261		SHIM,T-0.2	ｼﾑ	4	
8	22018-30121		SHIM,T-1.0	ｼﾑ	4	
9	01103-10045		BOLT	ﾎﾞﾙﾄ	4	
10	01184-12025		BOLT	ﾎﾞﾙﾄ	1	
11	63110-18901	+	CHART,CAPACITY	ﾁｬｰﾄ	1	
12	02432-01008	+	RIVET	ﾘﾍﾞｯﾄ	4	

FIG.108 BACKREST [VFHM2Y5]

(M7038240) ﾊﾞｯｸﾚｽﾄ

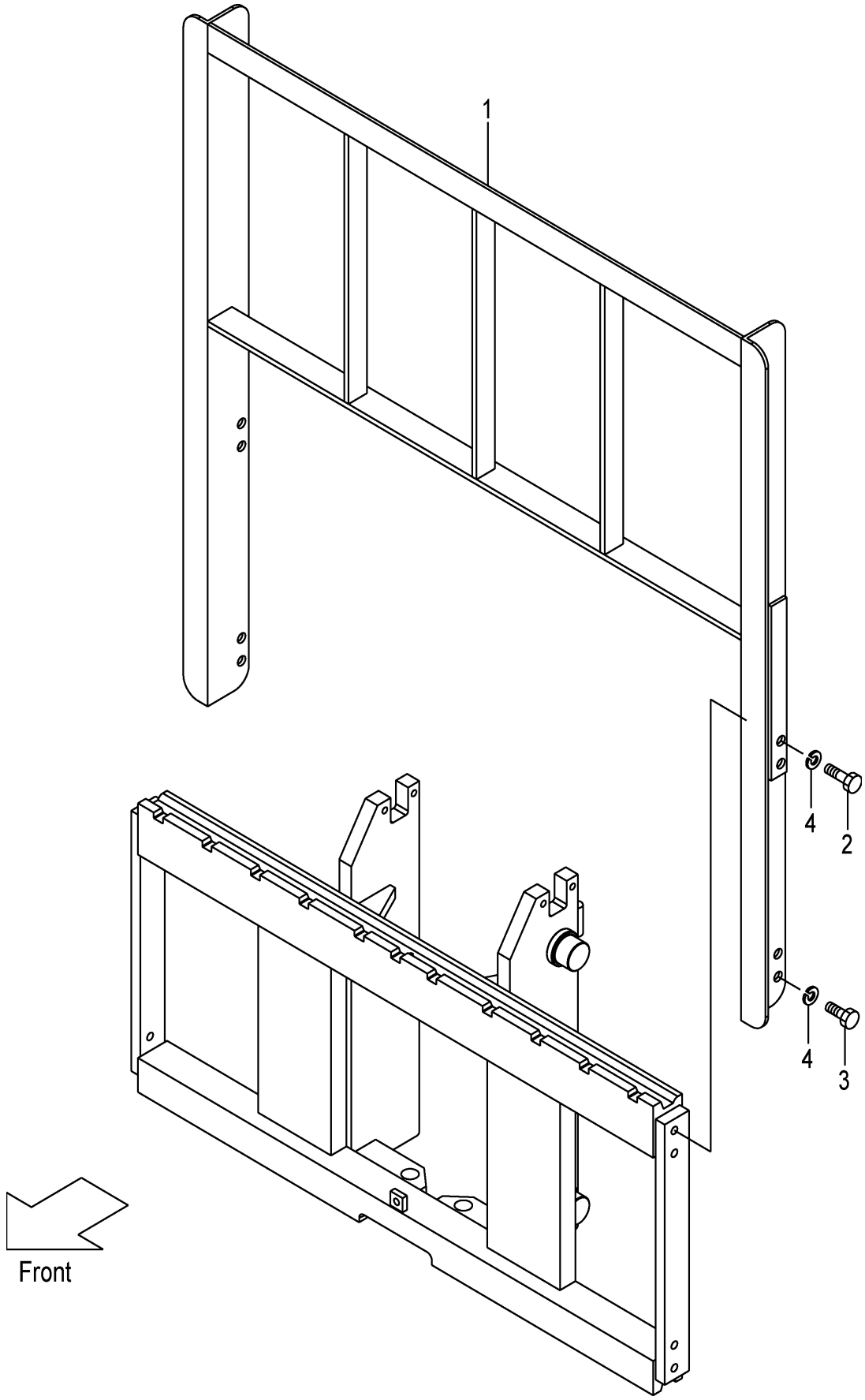

A:VFHM2Y5

Item No	Part No.	Mark	Description		Req'd	Remarks : Serial No.
1	234F8-22201		BACKREST	ﾊﾞｯｸﾚｽﾄ	1	
2	01100-14030		BOLT	ﾎﾞﾙﾄ	4	
3	01100-14025		BOLT	ﾎﾞﾙﾄ	4	
4	02010-00014		WASHER	ﾜｯｼｬ	8	

FIG.109 MAST [VFHM2Y5]

(M7030710) マスト

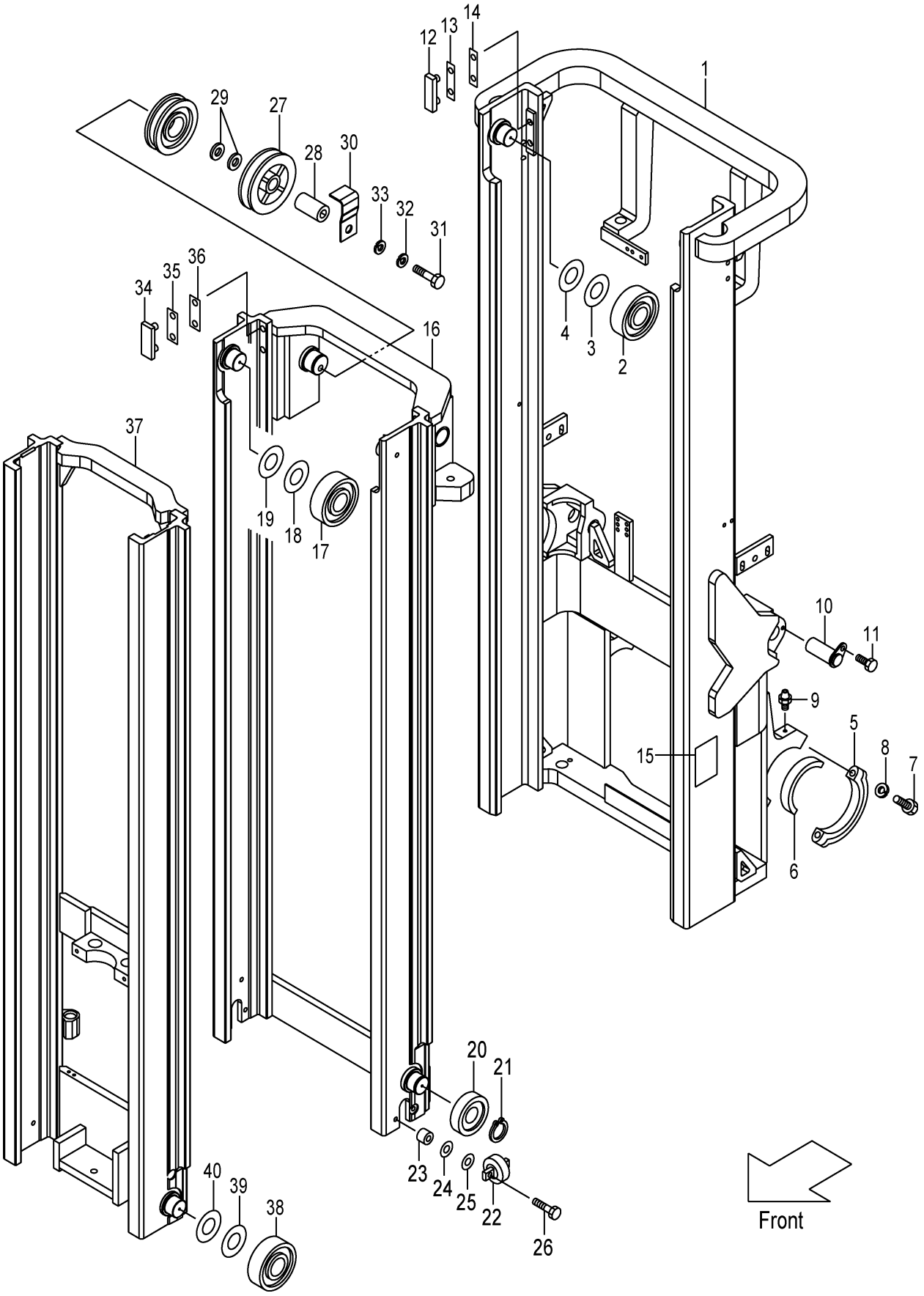

A:VFHM2Y5

Item No	Part No.	Mark	Description		Req'd	Remarks : Serial No.
1	22Y50-70211		MAST,OUTER VFHM360	ﾏｽﾄ	1	
-	22Y50-70221		MAST,OUTER VFHM400	ﾏｽﾄ	1	
-	22Y50-70201		MAST,OUTER VFHM435	ﾏｽﾄ	1	
-	22Y50-70231		MAST,OUTER VFHM480	ﾏｽﾄ	1	
-	22Y50-70241		MAST,OUTER VFHM500	ﾏｽﾄ	1	
-	22Y50-70251		MAST,OUTER VFHM540	ﾏｽﾄ	1	
-	22Y50-70261		MAST,OUTER VFHM550	ﾏｽﾄ	1	
-	22Y50-70271		MAST,OUTER VFHM600	ﾏｽﾄ	1	
-	22Y50-70281		MAST,OUTER VFHM650	ﾏｽﾄ	1	
-	22Y50-70291		MAST,OUTER VFHM700	ﾏｽﾄ	1	
-	22Y50-70301		MAST,OUTER VFHM750	ﾏｽﾄ	1	
2	277P8-22051		ROLLER,END,119.0	ﾛｰﾗ	2	
3	277P8-22071		SHIM,T-0.5	ｼﾑ	12	
4	277P8-22081		SHIM,T-1.0	ｼﾑ	12	
5	277P8-32701		CAP	ｷｬｯﾌﾟ	2	
6	214A8-02201		BUSHING	ﾌﾞｯｼﾝｸﾞ	2	
7	01103-16065		BOLT	ﾎﾞﾙﾄ	4	
8	02011-00016		WASHER	ﾜｯｼｬ	4	
9	04901-00100		FITTING	ﾌｨｯﾃｨﾝｸﾞ	2	
10	22N58-52501		PIN	ﾋﾟﾝ	2	
11	216G8-52301		BOLT	ﾎﾞﾙﾄ	2	
12	22Y58-33361		SLIPPER	ｽﾘｯﾊﾟ	2	
13	216G8-33361		SHIM,T-0.5	ｼﾑ	4	
14	216G8-33371		SHIM,T-1.0	ｼﾑ	2	
15	23678-06002		PLATE,NAME	ﾌﾟﾚｰﾄ	1	
16	22Y50-70411		MAST,MIDDLE VFHM360	ﾏｽﾄ	1	
-	22Y50-70421		MAST,MIDDLE VFHM400	ﾏｽﾄ	1	
-	22Y50-70401		MAST,MIDDLE VFHM435	ﾏｽﾄ	1	
-	22Y50-70431		MAST,MIDDLE VFHM480	ﾏｽﾄ	1	
-	22Y50-70441		MAST,MIDDLE VFHM500	ﾏｽﾄ	1	
-	22Y50-70451		MAST,MIDDLE VFHM540	ﾏｽﾄ	1	
-	22Y50-70461		MAST,MIDDLE VFHM550	ﾏｽﾄ	1	
-	22Y50-70471		MAST,MIDDLE VFHM600	ﾏｽﾄ	1	
-	22Y50-70481		MAST,MIDDLE VFHM650	ﾏｽﾄ	1	
-	22Y50-70491		MAST,MIDDLE VFHM700	ﾏｽﾄ	1	
-	22Y50-70501		MAST,MIDDLE VFHM750	ﾏｽﾄ	1	
17	277P8-22051		ROLLER,END,119.0	ﾛｰﾗ	2	
18	277P8-22071		SHIM,T-0.5	ｼﾑ	12	
19	277P8-22081		SHIM,T-1.0	ｼﾑ	12	
20	24609-42111		ROLLER,END,123.5	ﾛｰﾗ	2	
-	24609-42121		ROLLER,END,124.0	ﾛｰﾗ	(2)	
21	02100-00045		RING,SNAP	ﾘﾝｸﾞ	2	
22	23458-32052		ROLLER,SIDE	ﾛｰﾗ	2	
23	23818-30071		SPACER	ｽﾍﾟｰｻ	4	
24	22548-34051		SHIM,T-0.5	ｼﾑ	4	
25	22548-34061		SHIM,T-1.0	ｼﾑ	4	
26	01184-12045		BOLT	ﾎﾞﾙﾄ	4	
27	63130-15301		PULLEY	ﾌﾟｰﾘ	1	
28	214A0-72701		COLLAR	ｶﾗｰ	1	
29	62050-12331		SPACER	ｽﾍﾟｰｻ	2	

FIG.109 MAST [VFHM2Y5]

(M7030710) マスト

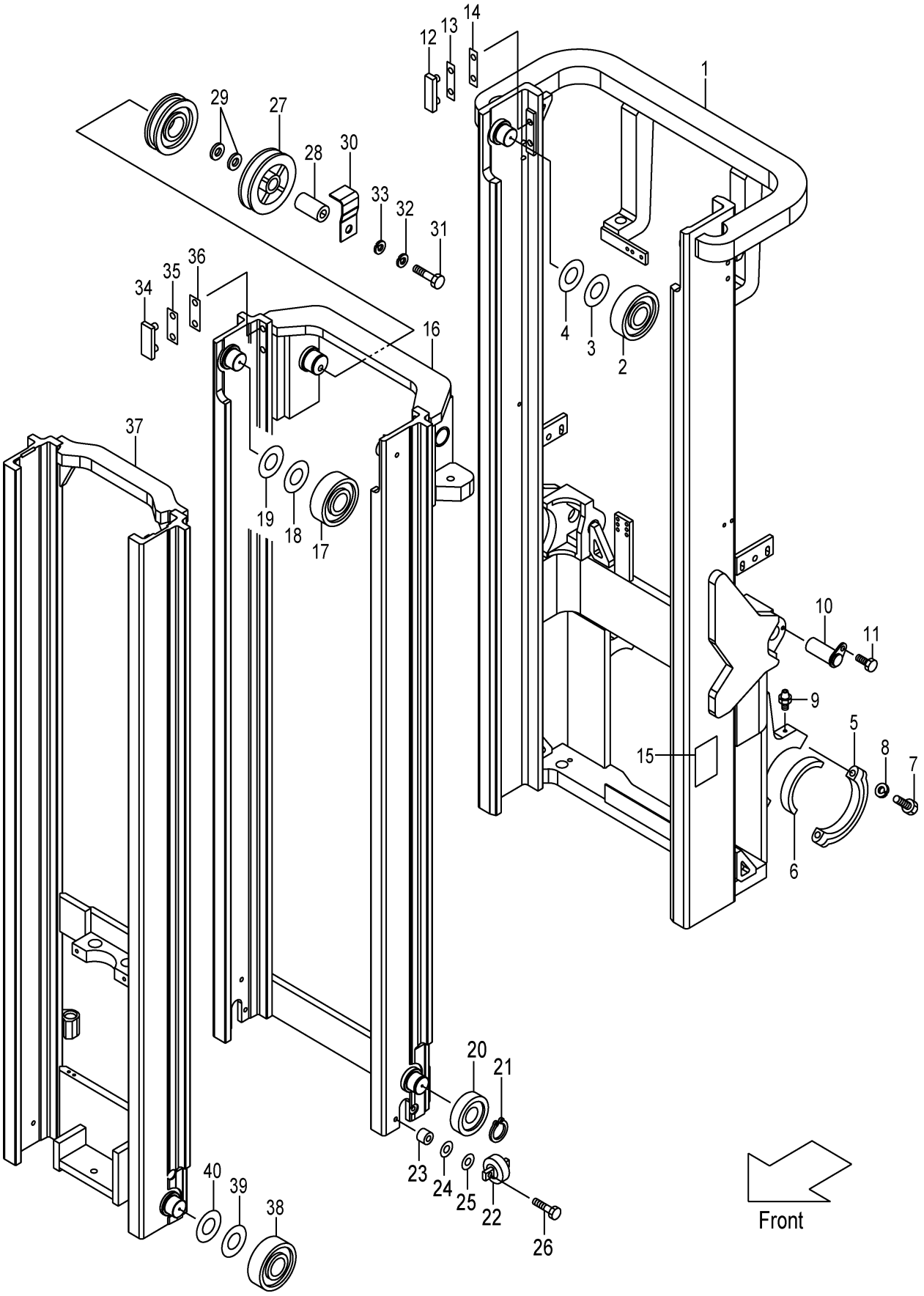

A:VFHM2Y5

Item No	Part No.	Mark	Description		Req'd	Remarks : Serial No.
30	514J3-74061		STOPPER,CHAIN	ｽﾄｯﾊﾟ	1	
31	01100-16060		BOLT	ﾎﾞﾙﾄ	1	
32	02010-00016		WASHER	ﾜｯｼｬ	1	
33	02000-00016		WASHER	ﾜｯｼｬ	1	
34	22Y58-33351		SLIPPER	ｽﾘｯﾊﾟ	2	
35	216G8-33361		SHIM,T-0.5	ｼﾑ	2	
36	216G8-33371		SHIM,T-1.0	ｼﾑ	10	
37	22Y50-70611		MAST,INNER VFHM360	ﾏｽﾄ	1	
-	22Y50-70621		MAST,INNER VFHM400	ﾏｽﾄ	1	
-	22Y50-70601		MAST,INNER VFHM435	ﾏｽﾄ	1	
-	22Y50-70631		MAST,INNER VFHM480	ﾏｽﾄ	1	
-	22Y50-70641		MAST,INNER VFHM500	ﾏｽﾄ	1	
-	22Y50-70651		MAST,INNER VFHM540	ﾏｽﾄ	1	
-	22Y50-70661		MAST,INNER VFHM550	ﾏｽﾄ	1	
-	22Y50-70671		MAST,INNER VFHM600	ﾏｽﾄ	1	
-	22Y50-70681		MAST,INNER VFHM650	ﾏｽﾄ	1	
-	22Y50-70691		MAST,INNER VFHM700	ﾏｽﾄ	1	
-	22Y50-70701		MAST,INNER VFHM750	ﾏｽﾄ	1	
38	277P8-22051		ROLLER,END,119.0	ﾛｰﾗ	2	
-	277P8-22061		ROLLER,END,119.5	ﾛｰﾗ	(2)	
39	277P8-22071		SHIM,T-0.5	ｼﾑ	12	
40	277P8-22081		SHIM,T-1.0	ｼﾑ	12	

FIG.110 LIFT CYLINDER(FRONT) [VFHM2Y5]

(M7030810) リフトシリンダ(フロント)

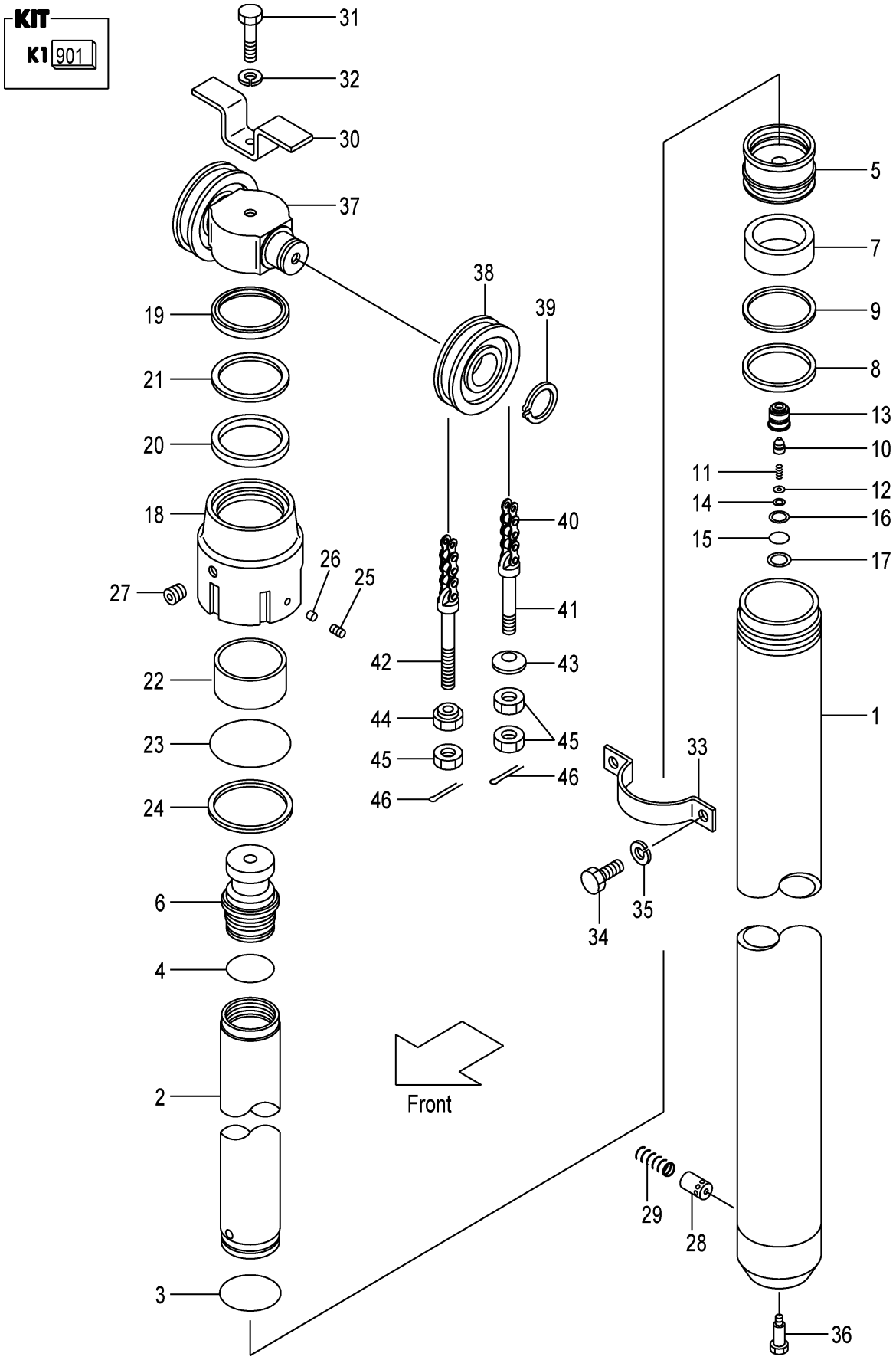

A:VFHM2Y5

Item No	Part No.	Mark	Description		Req'd	Remarks : Serial No.
A1	22Y50-80211		CYL-ASSY,LIFT VFHM360	ﾘﾌﾄｼﾘﾝﾀﾞｱｯｾﾝ	1	INC.1-29
-	22Y50-80221		CYL-ASSY,LIFT VFHM400	ﾘﾌﾄｼﾘﾝﾀﾞｱｯｾﾝ	1	INC.1-29
-	22Y50-80201		CYL-ASSY,LIFT VFHM435	ﾘﾌﾄｼﾘﾝﾀﾞｱｯｾﾝ	1	INC.1-29
-	22Y50-80231		CYL-ASSY,LIFT VFHM480	ﾘﾌﾄｼﾘﾝﾀﾞｱｯｾﾝ	1	INC.1-29
-	22Y50-80241		CYL-ASSY,LIFT VFHM500	ﾘﾌﾄｼﾘﾝﾀﾞｱｯｾﾝ	1	INC.1-29
-	22Y50-80251		CYL-ASSY,LIFT VFHM540	ﾘﾌﾄｼﾘﾝﾀﾞｱｯｾﾝ	1	INC.1-29
-	22Y50-80261		CYL-ASSY,LIFT VFHM550	ﾘﾌﾄｼﾘﾝﾀﾞｱｯｾﾝ	1	INC.1-29
-	22Y50-80271		CYL-ASSY,LIFT VFHM600	ﾘﾌﾄｼﾘﾝﾀﾞｱｯｾﾝ	1	INC.1-29
-	22Y50-80281		CYL-ASSY,LIFT VFHM650	ﾘﾌﾄｼﾘﾝﾀﾞｱｯｾﾝ	1	INC.1-29
-	22Y50-80291		CYL-ASSY,LIFT VFHM700	ﾘﾌﾄｼﾘﾝﾀﾞｱｯｾﾝ	1	INC.1-29
-	22Y50-80301		CYL-ASSY,LIFT VFHM750	ﾘﾌﾄｼﾘﾝﾀﾞｱｯｾﾝ	1	INC.1-29
901	214T0-89801	K1	KIT,OVERHAUL	ｵｰﾊﾞﾎｰﾙｷｯﾄ	1	INC.3,4,8,9,19-21,23,24
1	22Y50-80511		BODY,CYL VFHM360	ﾎﾞﾃﾞｨ	1	
-	22Y50-80521		BODY,CYL VFHM400	ﾎﾞﾃﾞｨ	1	
-	22Y50-80501		BODY,CYL VFHM435	ﾎﾞﾃﾞｨ	1	
-	22Y50-80531		BODY,CYL VFHM480	ﾎﾞﾃﾞｨ	1	
-	22Y50-80541		BODY,CYL VFHM500	ﾎﾞﾃﾞｨ	1	
-	22Y50-80551		BODY,CYL VFHM540	ﾎﾞﾃﾞｨ	1	
-	22Y50-80561		BODY,CYL VFHM550	ﾎﾞﾃﾞｨ	1	
-	22Y50-80571		BODY,CYL VFHM600	ﾎﾞﾃﾞｨ	1	
-	22Y50-80581		BODY,CYL VFHM650	ﾎﾞﾃﾞｨ	1	
-	22Y50-80591		BODY,CYL VFHM700	ﾎﾞﾃﾞｨ	1	
-	22Y50-80601		BODY,CYL VFHM750	ﾎﾞﾃﾞｨ	1	
2	22Y50-83711		ROD,PISTON VFHM360	ﾛｯﾄﾞ	1	
-	22Y50-83721		ROD,PISTON VFHM400	ﾛｯﾄﾞ	1	
-	22Y50-83701		ROD,PISTON VFHM435	ﾛｯﾄﾞ	1	
-	22Y50-83731		ROD,PISTON VFHM480	ﾛｯﾄﾞ	1	
-	22Y50-83741		ROD,PISTON VFHM500	ﾛｯﾄﾞ	1	
-	22Y50-83751		ROD,PISTON VFHM540	ﾛｯﾄﾞ	1	
-	22Y50-83761		ROD,PISTON VFHM550	ﾛｯﾄﾞ	1	
-	22Y50-83771		ROD,PISTON VFHM600	ﾛｯﾄﾞ	1	
-	22Y50-83781		ROD,PISTON VFHM650	ﾛｯﾄﾞ	1	
-	22Y50-83791		ROD,PISTON VFHM700	ﾛｯﾄﾞ	1	
-	22Y50-83801		ROD,PISTON VFHM750	ﾛｯﾄﾞ	1	
3	214T0-83121	*	RING,SNAP	ﾘﾝｸﾞ	1	
4	03310-00550	*	O-RING	Oﾘﾝｸﾞ	1	
5	214T0-83102		PISTON	ﾋﾟｽﾄﾝ	1	
6	214T0-83111		HEAD,PISTON	ﾍｯﾄﾞ	1	
7	22438-42641		WEARING	ｳｴｱﾘﾝｸﾞ	1	
8	25808-43111	*	PACKING	ﾊﾟｯｷﾝｸﾞ	1	
9	25808-43121	*	RING,BACK-UP	ﾘﾝｸﾞ	1	
A3	22Y50-83201		VALVE-ASSY,CHECK	ﾁｪｯｸﾊﾞﾙﾌﾞｱｯｾﾝ	1	INC.10-14
10	214T0-83521		POPPET	ﾎﾟﾍﾟｯﾄ	1	
11	214T0-83541		SPRING	ｽﾌﾟﾘﾝｸﾞ	1	
12	214T0-83531		PLATE	ﾌﾟﾚｰﾄ	1	
13	22Y50-83211		CASE	ｹｰｽ	1	
14	02110-00014		RING,SNAP	ﾘﾝｸﾞ	1	
15	03320-00210		O-RING	Oﾘﾝｸﾞ	1	
16	03360-00210		RING,BACK-UP	ﾘﾝｸﾞ	1	
17	02110-00028		RING,SNAP	ﾘﾝｸﾞ	1	

FIG.110 LIFT CYLINDER(FRONT) [VFHM2Y5]

(M7030810) リフトシリンダ(フロント)

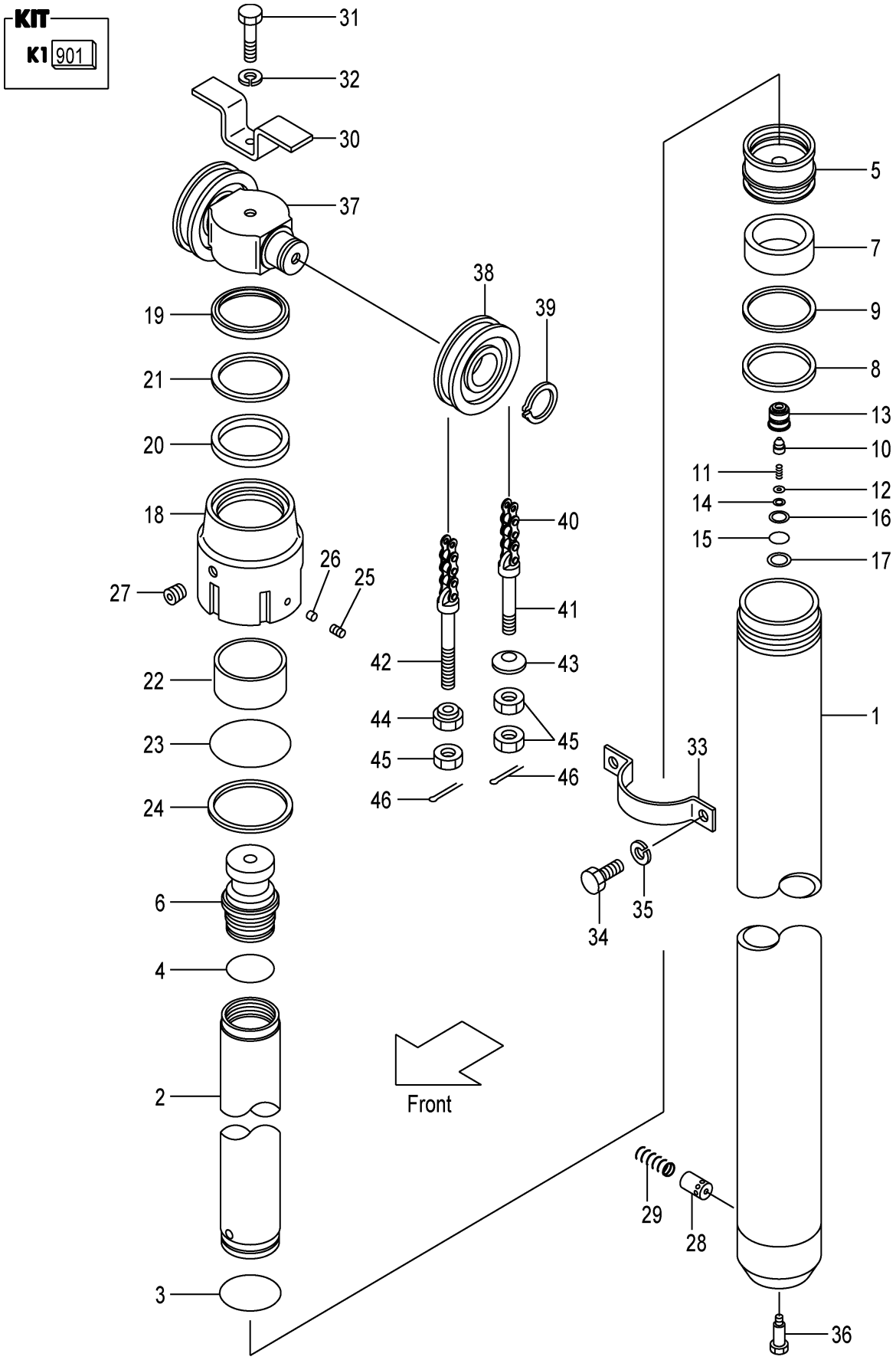

A:VFHM2Y5

Item No	Part No.	Mark	Description		Req'd	Remarks : Serial No.
18	23650-82403		CAP	ｷｬｯﾌﾟ	1	
19	27410-53201	*	SEAL,DUST	ｼｰﾙ	1	
20	23670-82251	*	PACKING	ﾊﾟｯｷﾝｸﾞ	1	
21	23670-82261	*	RING,BACK-UP	ﾘﾝｸﾞ	1	
22	23650-82161		BUSHING	ﾌﾞｯｼﾝｸﾞ	1	
23	03350-00950	*	O-RING	Oﾘﾝｸﾞ	1	
24	23650-82141	*	RING,BACK-UP	ﾘﾝｸﾞ	1	
25	25908-44101		PLUG	ﾌﾟﾗｸﾞ	1	
26	25908-44111		PLUG,NYLON	ﾌﾟﾗｸﾞ	1	
27	22518-40151		PLUG	ﾌﾟﾗｸﾞ	1	
28	229L0-82551		PISTON	ﾋﾟｽﾄﾝ	1	
29	224T0-53451		SPRING	ｽﾌﾟﾘﾝｸﾞ	1	
30	214T0-83251		STOPPER	ｽﾄｯﾊﾟ	1	
31	01100-16080		BOLT	ﾎﾞﾙﾄ	1	
32	02010-00016		WASHER	ﾜｯｼｬ	1	
33	214A0-82651		SUPPORT	ｻﾎﾟｰﾄ	1	
34	01103-10020		BOLT	ﾎﾞﾙﾄ	2	
35	02011-00010		WASHER	ﾜｯｼｬ	2	
36	224T0-82561		BOLT	ﾎﾞﾙﾄ	1	
37	22Y50-83001		HEAD,PISTON	ﾍｯﾄﾞ	1	
38	24609-41242		SHEAVE	ｼｰﾌﾞ	2	
39	02100-00050		RING,SNAP	ﾘﾝｸﾞ	2	
40	23918-45551		CHAIN,LEAF VFHM360	ﾁｪｰﾝ	2	
-	23918-45611		CHAIN,LEAF VFHM400	ﾁｪｰﾝ	2	
-	23918-45651		CHAIN,LEAF VFHM435	ﾁｪｰﾝ	2	
-	23918-45711		CHAIN,LEAF VFHM480	ﾁｪｰﾝ	2	
-	23918-45751		CHAIN,LEAF VFHM500	ﾁｪｰﾝ	2	
-	23918-45791		CHAIN,LEAF VFHM540	ﾁｪｰﾝ	2	
-	23918-45811		CHAIN,LEAF VFHM550	ﾁｪｰﾝ	2	
-	23918-45891		CHAIN,LEAF VFHM600	ﾁｪｰﾝ	2	
-	23918-45971		CHAIN,LEAF VFHM650	ﾁｪｰﾝ	2	
-	23918-46051		CHAIN,LEAF VFHM700	ﾁｪｰﾝ	2	
-	23918-46131		CHAIN,LEAF VFHM750	ﾁｪｰﾝ	2	
41	24329-45441		PIN	ﾋﾟﾝ	2	
42	23918-42681		PIN	ﾋﾟﾝ	2	
43	24319-45751		CONE	ｺｰﾝ	2	
44	23818-30271		NUT	ﾅｯﾄ	2	
45	01402-00022		NUT	ﾅｯﾄ	6	
46	02200-03040		PIN,COTTER	ﾋﾟﾝ	4	

FIG.111 LIFT CYLINDER(REAR) [VFHM2Y5]

(M7030820) リフトシリンダ(リヤー)

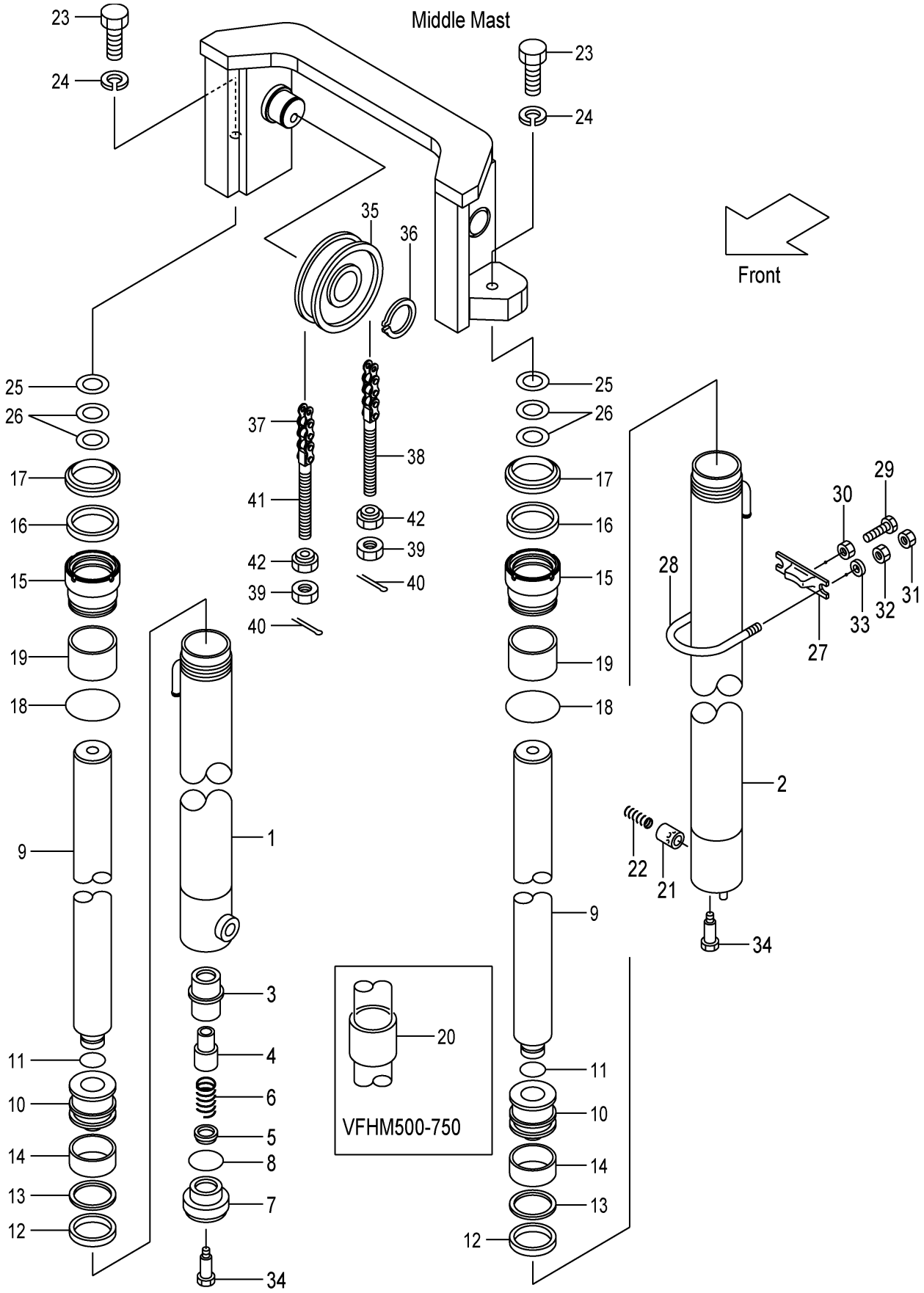

A:VFHM2Y5

Item No	Part No.	Mark	Description	Req'd	Remarks : Serial No.
A1	22Y50-80711		CYL-ASSY,LIFT,RH VFHM360 ﾘﾌﾄｼﾘﾝﾀﾞｱｯｾﾝ	1	INC.1,3-19
-	22Y50-80721		CYL-ASSY,LIFT,RH VFHM400 ﾘﾌﾄｼﾘﾝﾀﾞｱｯｾﾝ	1	INC.1,3-19
-	22Y50-80701		CYL-ASSY,LIFT,RH VFHM435 ﾘﾌﾄｼﾘﾝﾀﾞｱｯｾﾝ	1	INC.1,3-19
-	22Y50-80731		CYL-ASSY,LIFT,RH VFHM480 ﾘﾌﾄｼﾘﾝﾀﾞｱｯｾﾝ	1	INC.1,3-19
-	22Y50-80741		CYL-ASSY,LIFT,RH VFHM500 ﾘﾌﾄｼﾘﾝﾀﾞｱｯｾﾝ	1	INC.1,3-20
-	22Y50-80751		CYL-ASSY,LIFT,RH VFHM540 ﾘﾌﾄｼﾘﾝﾀﾞｱｯｾﾝ	1	INC.1,3-20
-	22Y50-80761		CYL-ASSY,LIFT,RH VFHM550 ﾘﾌﾄｼﾘﾝﾀﾞｱｯｾﾝ	1	INC.1,3-20
-	22Y50-80771		CYL-ASSY,LIFT,RH VFHM600 ﾘﾌﾄｼﾘﾝﾀﾞｱｯｾﾝ	1	INC.1,3-20
-	22Y50-80781		CYL-ASSY,LIFT,RH VFHM650 ﾘﾌﾄｼﾘﾝﾀﾞｱｯｾﾝ	1	INC.1,3-20
-	22Y50-80791		CYL-ASSY,LIFT,RH VFHM700 ﾘﾌﾄｼﾘﾝﾀﾞｱｯｾﾝ	1	INC.1,3-20
-	22Y50-80801		CYL-ASSY,LIFT,RH VFHM750 ﾘﾌﾄｼﾘﾝﾀﾞｱｯｾﾝ	1	INC.1,3-20
-	22Y50-80911		CYL-ASSY,LIFT,LH VFHM360 ﾘﾌﾄｼﾘﾝﾀﾞｱｯｾﾝ	1	INC.2,9-19,21,22
-	22Y50-80921		CYL-ASSY,LIFT,LH VFHM400 ﾘﾌﾄｼﾘﾝﾀﾞｱｯｾﾝ	1	INC.2,9-19,21,22
-	22Y50-80901		CYL-ASSY,LIFT,LH VFHM435 ﾘﾌﾄｼﾘﾝﾀﾞｱｯｾﾝ	1	INC.2,9-19,21,22
-	22Y50-80931		CYL-ASSY,LIFT,LH VFHM480 ﾘﾌﾄｼﾘﾝﾀﾞｱｯｾﾝ	1	INC.2,9-19,21,22
-	22Y50-80941		CYL-ASSY,LIFT,LH VFHM500 ﾘﾌﾄｼﾘﾝﾀﾞｱｯｾﾝ	1	INC.2,9-22
-	22Y50-80951		CYL-ASSY,LIFT,LH VFHM540 ﾘﾌﾄｼﾘﾝﾀﾞｱｯｾﾝ	1	INC.2,9-22
-	22Y50-80961		CYL-ASSY,LIFT,LH VFHM550 ﾘﾌﾄｼﾘﾝﾀﾞｱｯｾﾝ	1	INC.2,9-22
-	22Y50-80971		CYL-ASSY,LIFT,LH VFHM600 ﾘﾌﾄｼﾘﾝﾀﾞｱｯｾﾝ	1	INC.2,9-22
-	22Y50-80981		CYL-ASSY,LIFT,LH VFHM650 ﾘﾌﾄｼﾘﾝﾀﾞｱｯｾﾝ	1	INC.2,9-22
-	22Y50-80991		CYL-ASSY,LIFT,LH VFHM700 ﾘﾌﾄｼﾘﾝﾀﾞｱｯｾﾝ	1	INC.2,9-22
-	22Y50-80891		CYL-ASSY,LIFT,LH VFHM750 ﾘﾌﾄｼﾘﾝﾀﾞｱｯｾﾝ	1	INC.2,9-22
1	22Y50-81011		BODY,CYL,RH VFHM360 ﾎﾞﾃﾞｨ	1	
-	22Y50-81021		BODY,CYL,RH VFHM400 ﾎﾞﾃﾞｨ	1	
-	22Y50-81001		BODY,CYL,RH VFHM435 ﾎﾞﾃﾞｨ	1	
-	22Y50-81031		BODY,CYL,RH VFHM480 ﾎﾞﾃﾞｨ	1	
-	22Y50-81041		BODY,CYL,RH VFHM500 ﾎﾞﾃﾞｨ	1	
-	22Y50-81051		BODY,CYL,RH VFHM540 ﾎﾞﾃﾞｨ	1	

FIG.111 LIFT CYLINDER(REAR) [VFHM2Y5]

(M7030820) リフトシリンダ(リヤー)

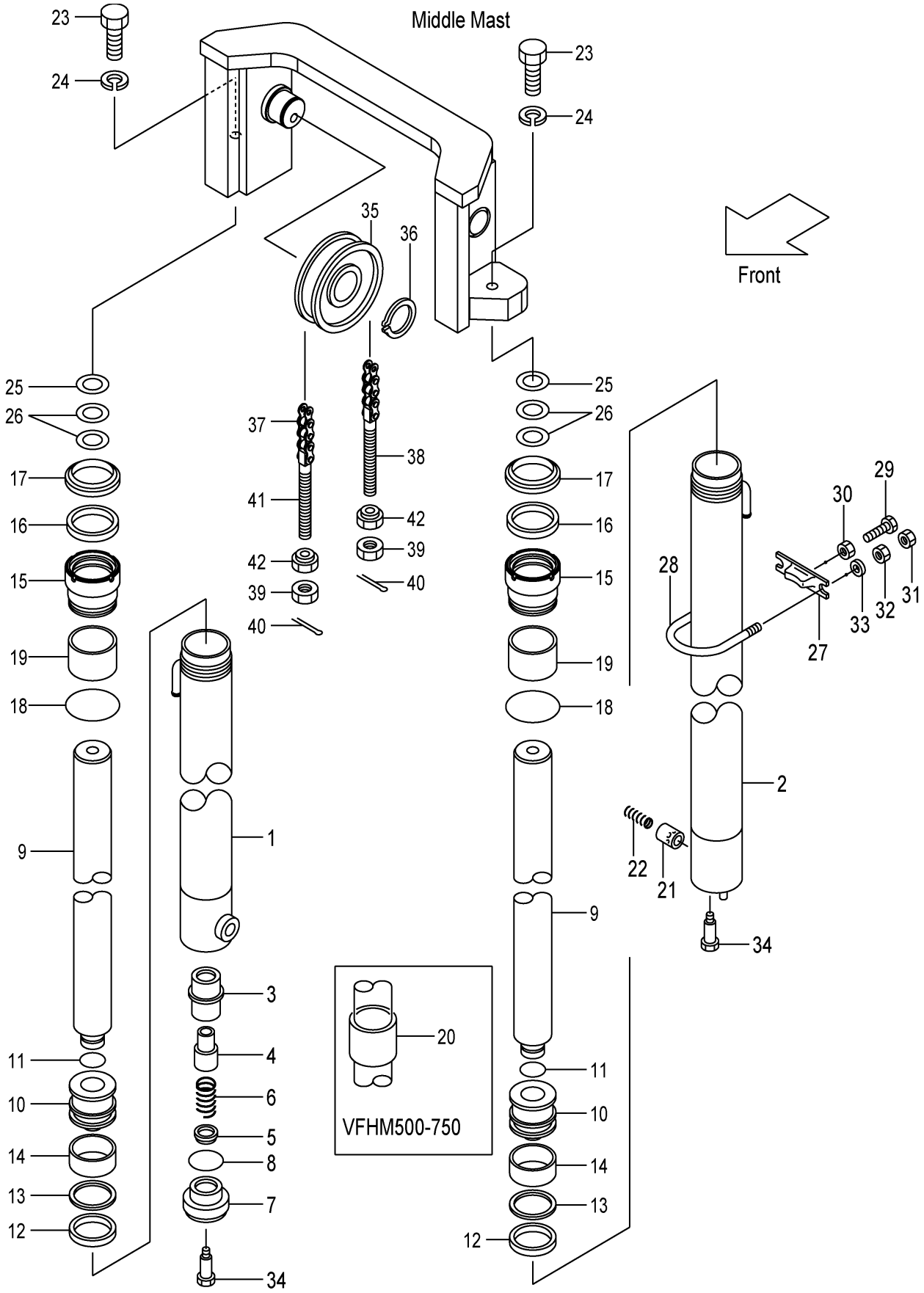

A:VFHM2Y5

Item No	Part No.	Mark	Description		Req'd	Remarks : Serial No.
-	22Y50-81061		BODY,CYL,RH VFHM550	ﾎﾞﾃﾞｨ	1	
-	22Y50-81071		BODY,CYL,RH VFHM600	ﾎﾞﾃﾞｨ	1	
-	22Y50-81081		BODY,CYL,RH VFHM650	ﾎﾞﾃﾞｨ	1	
-	22Y50-81091		BODY,CYL,RH VFHM700	ﾎﾞﾃﾞｨ	1	
-	22Y50-81101		BODY,CYL,RH VFHM750	ﾎﾞﾃﾞｨ	1	
2	22Y50-81211		BODY,CYL,LH VFHM360	ﾎﾞﾃﾞｨ	1	
-	22Y50-81221		BODY,CYL,LH VFHM400	ﾎﾞﾃﾞｨ	1	
-	22Y50-81201		BODY,CYL,LH VFHM435	ﾎﾞﾃﾞｨ	1	
-	22Y50-81231		BODY,CYL,LH VFHM480	ﾎﾞﾃﾞｨ	1	
-	22Y50-81241		BODY,CYL,LH VFHM500	ﾎﾞﾃﾞｨ	1	
-	22Y50-81251		BODY,CYL,LH VFHM540	ﾎﾞﾃﾞｨ	1	
-	22Y50-81261		BODY,CYL,LH VFHM550	ﾎﾞﾃﾞｨ	1	
-	22Y50-81271		BODY,CYL,LH VFHM600	ﾎﾞﾃﾞｨ	1	
-	22Y50-81281		BODY,CYL,LH VFHM650	ﾎﾞﾃﾞｨ	1	
-	22Y50-81291		BODY,CYL,LH VFHM700	ﾎﾞﾃﾞｨ	1	
-	22Y50-81301		BODY,CYL,LH VFHM750	ﾎﾞﾃﾞｨ	1	
3	53658-43021		SLEEVE	ｽﾘｰﾌﾞ	1	(RH)
4	53658-43011		PISTON	ﾋﾟｽﾄﾝ	1	(RH)
5	53658-43001		CHECK	ﾁｪｯｸ	1	(RH)
6	53658-43031		SPRING	ｽﾌﾟﾘﾝｸﾞ	1	(RH)
7	53658-43041		PLUG	ﾌﾟﾗｸﾞ	1	(RH)
8	03320-00340		O-RING	Oﾘﾝｸﾞ	1	(RH)
9	214T0-82611		ROD,PISTON VFHM360	ﾛｯﾄﾞ	2	
-	228C8-42211		ROD,PISTON VFHM400	ﾛｯﾄﾞ	2	
-	228C8-42231		ROD,PISTON VFHM435	ﾛｯﾄﾞ	2	
-	214T0-82631		ROD,PISTON VFHM480	ﾛｯﾄﾞ	2	
-	228C8-42241		ROD,PISTON VFHM500	ﾛｯﾄﾞ	2	
-	228C8-42261		ROD,PISTON VFHM540	ﾛｯﾄﾞ	2	
-	214T0-82661		ROD,PISTON VFHM550	ﾛｯﾄﾞ	2	
-	214T0-82671		ROD,PISTON VFHM600	ﾛｯﾄﾞ	2	
-	214T0-82681		ROD,PISTON VFHM650	ﾛｯﾄﾞ	2	
-	214T0-82691		ROD,PISTON VFHM700	ﾛｯﾄﾞ	2	
-	214T0-82701		ROD,PISTON VFHM750	ﾛｯﾄﾞ	2	
10	214T0-83181		PISTON	ﾋﾟｽﾄﾝ	2	
11	224T8-42512		RING,SNAP	ﾘﾝｸﾞ	2	
12	23460-53161		PACKING	ﾊﾟｯｷﾝｸﾞ	2	
13	22658-52301		RING,BACK-UP	ﾘﾝｸﾞ	2	
14	23460-53181		WEARING	ｳｴｱﾘﾝｸﾞ	2	
15	22Y58-42601		CAP	ｷｬｯﾌﾟ	2	
16	224T8-46011		PACKING	ﾊﾟｯｷﾝｸﾞ	2	
17	22N54-52141		SEAL,DUST	ｼｰﾙ	2	
18	214J8-42581		O-RING	Oﾘﾝｸﾞ	2	
19	22Y58-42001		BUSHING	ﾌﾞｯｼﾝｸﾞ	2	
20	22679-43431		SPACER VFHM500	ｽﾍﾟｰｻ	2	
-	24600-82701		SPACER VFHM540	ｽﾍﾟｰｻ	2	
-	22679-43431		SPACER VFHM550	ｽﾍﾟｰｻ	2	
-	24600-82711		SPACER VFHM600	ｽﾍﾟｰｻ	2	
-	214T0-83601		SPACER VFHM650	ｽﾍﾟｰｻ	2	
-	214T0-83611		SPACER VFHM700	ｽﾍﾟｰｻ	2	
-	214T0-83611		SPACER VFHM750	ｽﾍﾟｰｻ	2	

FIG.111 LIFT CYLINDER(REAR) [VFHM2Y5]

(M7030820) リフトシリンダ(リヤー)

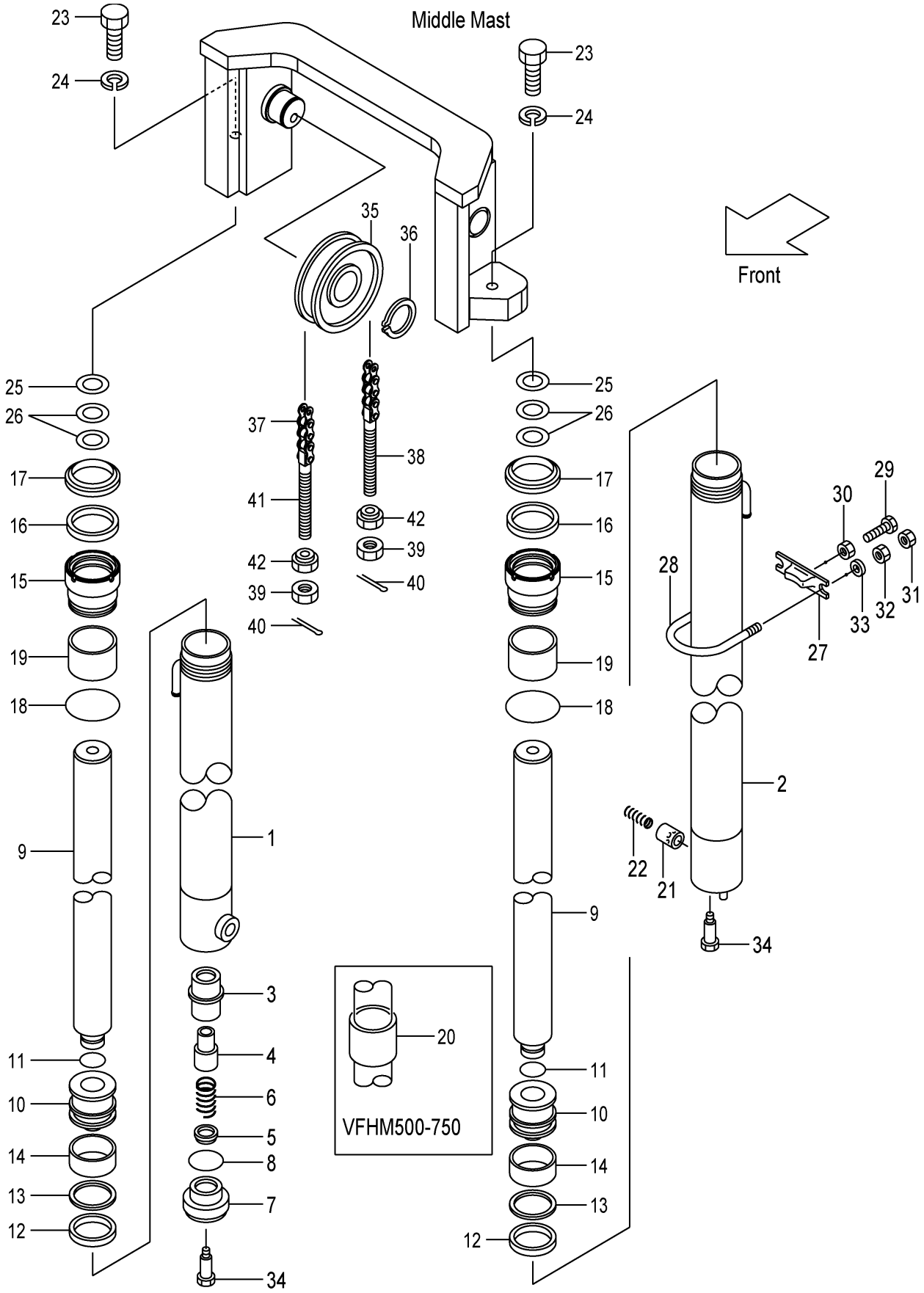

A:VFHM2Y5

Item No	Part No.	Mark	Description		Req'd	Remarks : Serial No.
21	224T8-42801		PISTON	ﾋﾟｽﾄﾝ	1	(LH)
22	25908-44281		SPRING	ｽﾌﾟﾘﾝｸﾞ	1	(LH)
23	01103-16045		BOLT	ﾎﾞﾙﾄ	2	
24	02011-00016		WASHER	ﾜｯｼｬ	2	
25	24319-45791		SHIM	ｼﾑ	2	
26	24319-45781		SHIM	ｼﾑ	4	
27	224T8-42711		SUPPORT	ｻﾎﾟｰﾄ	2	(VFHM360-550)
-	224T8-42711		SUPPORT	ｻﾎﾟｰﾄ	4	(VFHM600-750)
28	224T8-42701		U-BOLT	Uﾎﾞﾙﾄ	2	(VFHM360-550)
-	224T8-42701		U-BOLT	Uﾎﾞﾙﾄ	4	(VFHM600-750)
29	01120-16040		BOLT	ﾎﾞﾙﾄ	2	(VFHM360-550)
-	01120-16040		BOLT	ﾎﾞﾙﾄ	4	(VFHM600-750)
30	01402-00016		NUT	ﾅｯﾄ	2	(VFHM360-550)
-	01402-00016		NUT	ﾅｯﾄ	4	(VFHM600-750)
31	01400-00010		NUT	ﾅｯﾄ	4	(VFHM360-550)
-	01400-00010		NUT	ﾅｯﾄ	8	(VFHM600-750)
32	02010-00010		NUT	ﾅｯﾄ	4	(VFHM360-550)
-	02010-00010		NUT	ﾅｯﾄ	8	(VFHM600-750)
33	02000-00010		WASHER	ﾜｯｼｬ	4	(VFHM360-550)
-	02000-00010		WASHER	ﾜｯｼｬ	8	(VFHM600-750)
34	214A0-82831		BOLT	ﾎﾞﾙﾄ	2	
35	24609-41242		SHEAVE	ｼｰﾌﾞ	2	
36	02100-00050		RING,SNAP	ﾘﾝｸﾞ	2	
37	23918-45631		CHAIN VFHM360	ﾁｪｰﾝ	2	
-	23918-45691		CHAIN VFHM400	ﾁｪｰﾝ	2	
-	23918-45731		CHAIN VFHM435	ﾁｪｰﾝ	2	
-	23918-45791		CHAIN VFHM480	ﾁｪｰﾝ	2	
-	23918-45831		CHAIN VFHM500	ﾁｪｰﾝ	2	
-	23918-45871		CHAIN VFHM540	ﾁｪｰﾝ	2	
-	23918-45891		CHAIN VFHM550	ﾁｪｰﾝ	2	
-	23918-45971		CHAIN VFHM600	ﾁｪｰﾝ	2	
-	23918-46051		CHAIN VFHM650	ﾁｪｰﾝ	2	
-	23918-46131		CHAIN VFHM700	ﾁｪｰﾝ	2	
-	23918-46211		CHAIN VFHM750	ﾁｪｰﾝ	2	
38	24329-45441		PIN,ANCHOR	ﾋﾟﾝ	2	
39	01402-00022		NUT	ﾅｯﾄ	4	
40	02200-03040		PIN,COTTER	ﾋﾟﾝ	4	
41	23918-42681		PIN,ANCHOR	ﾋﾟﾝ	2	
42	23818-30271		NUT	ﾅｯﾄ	4	

FIG.112 MAST PIPING [VFHM2Y5]

(M7030830) ﾏｽﾄﾊﾟｲﾋﾟﾝｸﾞ

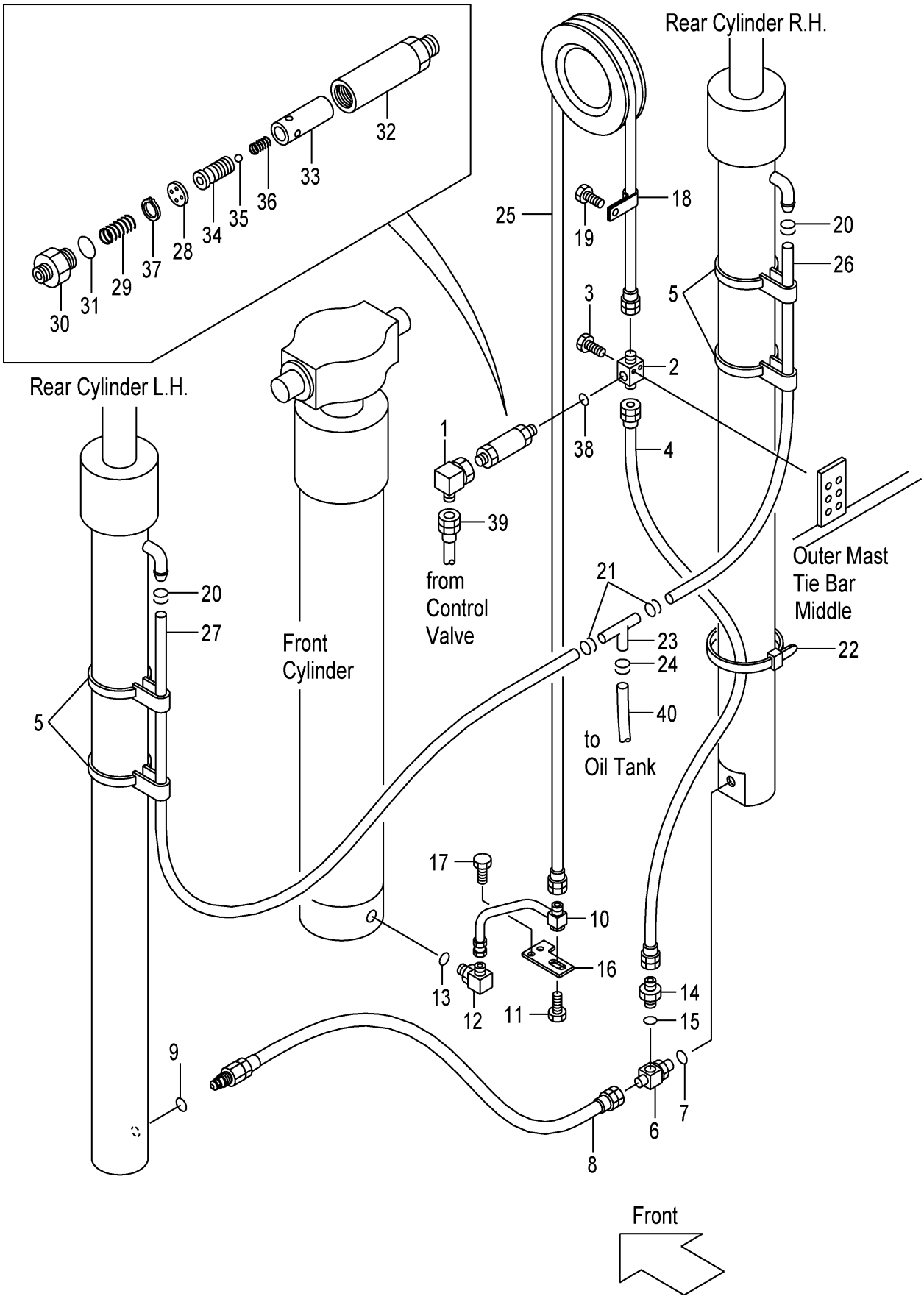

A:VFHM2Y5

Item No	Part No.	Mark	Description		Req'd	Remarks : Serial No.
1	62150-14321		ELBOW	ｴﾙﾎﾞ	1	
2	229F0-94101		THREE-WAY	ｽﾘｰｳｴｲ	1	
3	01184-10040		BOLT	ﾎﾞﾙﾄ	2	
4	22Y50-92131		HOSE	ﾎｰｽ	1	
5	22N58-45001		BAND	ﾊﾞﾝﾄﾞ	4	
A1	23659-44602		THREE-WAY-ASSY	ｽﾘｰｳｪｲｱｯｾﾝ	1	INC.6,7
6	NO PART NO.	#	THREE-WAY	ｽﾘｰｳｴｲ	1	
7	03320-00180		O-RING	Oﾘﾝｸﾞ	1	
8	22Y50-93101		HOSE	ﾎｰｽ	1	
9	03320-00240		O-RING	Oﾘﾝｸﾞ	1	
10	22Y50-90401		PIPE	ﾊﾟｲﾌﾟ	1	
11	01186-10020		BOLT	ﾎﾞﾙﾄ	1	
A2	22F90-91001		ELBOW-ASSY	ｴﾙﾎﾞｱｯｾﾝ	1	INC.12,13
12	NO PART NO.	#	ELBOW	ｴﾙﾎﾞ	1	
13	03320-00240		O-RING	Oﾘﾝｸﾞ	1	
A3	04134-20404		NIPPLE-ASSY	ﾆｯﾌﾟﾙｱｯｾﾝ	1	INC.14,15
14	NO PART NO.	#	NIPPLE	ﾆｯﾌﾟﾙ	1	
15	03320-00180		O-RING	Oﾘﾝｸﾞ	1	
16	22N50-73191		PLATE	ﾌﾟﾚｰﾄ	1	
17	01185-08020		BOLT	ﾎﾞﾙﾄ	2	
18	26602-42101		CLIP	ｸﾘｯﾌﾟ	1	
19	01184-10012		BOLT	ﾎﾞﾙﾄ	1	
20	24329-46201		CLIP	ｸﾘｯﾌﾟ	2	
21	24329-46201		CLIP	ｸﾘｯﾌﾟ	2	
22	25790-94021		BAND,HOSE	ﾊﾞﾝﾄﾞ	1	
23	53675-55051		THREE-WAY	ｽﾘｰｳｴｲ	1	
24	24329-46201		CLIP	ｸﾘｯﾌﾟ	2	
25	04601-44227		HOSE,HP VFHM360	ﾎｰｽ	1	
-	04601-44251		HOSE,HP VFHM400	ﾎｰｽ	1	
-	04601-44275		HOSE,HP VFHM435	ﾎｰｽ	1	
-	04601-44304		HOSE,HP VFHM480	ﾎｰｽ	1	
-	04601-44324		HOSE,HP VFHM500	ﾎｰｽ	1	
-	04601-44348		HOSE,HP VFHM540	ﾎｰｽ	1	
-	04601-44356		HOSE,HP VFHM550	ﾎｰｽ	1	
-	04601-44392		HOSE,HP VFHM600	ﾎｰｽ	1	
-	04601-44433		HOSE,HP VFHM650	ﾎｰｽ	1	
-	04601-44476		HOSE,HP VFHM700	ﾎｰｽ	1	
-	04601-44508		HOSE,HP VFHM750	ﾎｰｽ	1	
26	24328-40150		HOSE,RH VFHM360	ﾎｰｽ	1	
-	24328-40165		HOSE,RH VFHM400	ﾎｰｽ	1	
-	24328-40175		HOSE,RH VFHM435	ﾎｰｽ	1	
-	24328-40190		HOSE,RH VFHM480	ﾎｰｽ	1	
-	24328-40200		HOSE,RH VFHM500	ﾎｰｽ	1	
-	24328-40215		HOSE,RH VFHM540	ﾎｰｽ	1	
-	24328-40220		HOSE,RH VFHM550	ﾎｰｽ	1	
-	24328-40235		HOSE,RH VFHM600	ﾎｰｽ	1	
-	24328-40260		HOSE,RH VFHM650	ﾎｰｽ	1	
-	24328-40280		HOSE,RH VFHM700	ﾎｰｽ	1	
-	24328-40295		HOSE,RH VFHM750	ﾎｰｽ	1	
27	24328-40155		HOSE,LH VFHM360	ﾎｰｽ	1	

FIG.112 MAST PIPING [VFHM2Y5]

(M7030830) ﾏｽﾄﾊﾟｲﾋﾟﾝｸﾞ

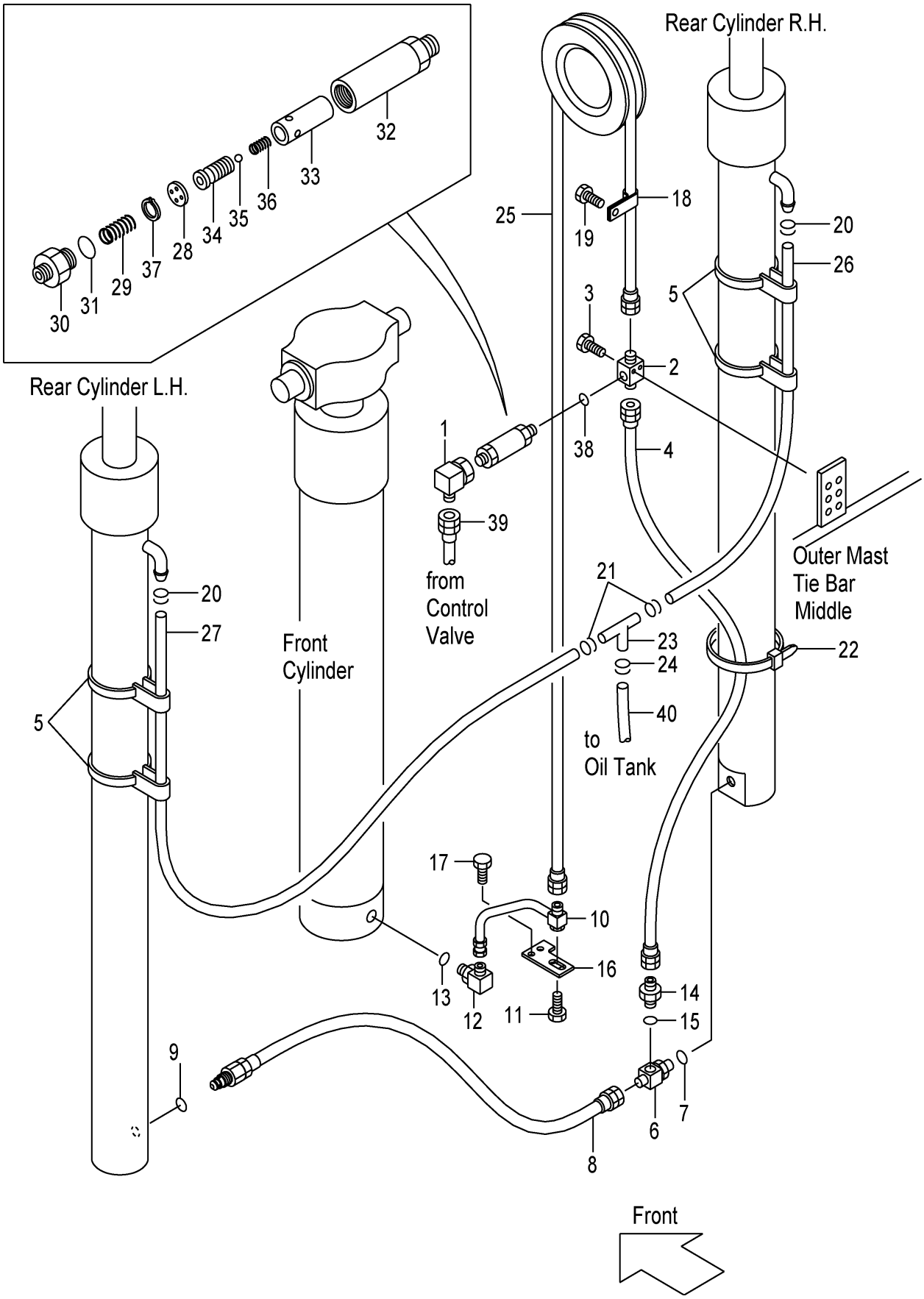

A:VFHM2Y5

Item No	Part No.	Mark	Description		Req'd	Remarks : Serial No.
-	24328-40170		HOSE,LH VFHM400	ﾎｰｽ	1	
-	24328-40180		HOSE,LH VFHM435	ﾎｰｽ	1	
-	24328-40195		HOSE,LH VFHM480	ﾎｰｽ	1	
-	24328-40205		HOSE,LH VFHM500	ﾎｰｽ	1	
-	24328-40220		HOSE,LH VFHM540	ﾎｰｽ	1	
-	24328-40225		HOSE,LH VFHM550	ﾎｰｽ	1	
-	24328-40240		HOSE,LH VFHM600	ﾎｰｽ	1	
-	24328-40265		HOSE,LH VFHM650	ﾎｰｽ	1	
-	24328-40285		HOSE,LH VFHM700	ﾎｰｽ	1	
-	24328-40300		HOSE,LH VFHM750	ﾎｰｽ	1	
A4	22Y58-41001		REGULATOR-ASSY,FLOW	ﾌﾛｰﾚｷﾞｭﾚｰﾀｱｯｾﾝ	1	INC.28-37
28	NO PART NO.	#	PLATE	ﾌﾟﾚｰﾄ	1	
29	27979-43101		SPRING	ｽﾌﾟﾘﾝｸﾞ	1	
30	NO PART NO.	#	NIPPLE	ﾆｯﾌﾟﾙ	1	
31	03300-00280		O-RING	Oﾘﾝｸﾞ	1	
32	NO PART NO.	#	CASE	ｹｰｽ	1	
33	NO PART NO.	#	SLEEVE	ｽﾘｰﾌﾞ	1	
34	NO PART NO.	#	PISTON	ﾋﾟｽﾄﾝ	1	
35	24459-42951		BALL,NYLON	ﾎﾞｰﾙ	1	
36	214A8-44151		SPRING	ｽﾌﾟﾘﾝｸﾞ	1	
37	02110-00018		RING,SNAP	ﾘﾝｸﾞ	1	
38	03320-00180		O-RING	Oﾘﾝｸﾞ	1	
39	2N40-82801		HOSE	ﾎｰｽ	1	
40	24328-40150		HOSE	ﾎｰｽ	1	

PARTS NUMBER INDEX

Part No.	Fig.No.	Part No.	Fig.No.	Part No.	Fig.No.	Part No.	Fig.No.
BK-7341006000	22	01100-14030	108	01183-08012	78	01400-00010	97
BK-8059061000	22	01100-16020	61	01183-08012	79	01400-00010	111
BK-8104209010	22	01100-16045	38	01183-08012	80	01400-00010	111
BK-81431A4700	22	01100-16055	43	01183-08016	50	01400-00012	1
C-11452-2Y5-D	91	01100-16060	109	01183-08016	62	01400-00012	42
C-11452-2Y5-D	92	01100-16080	110	01183-08030	88	01400-00012	43
C-52-10901-64550	32	01103-08016	31	01183-10030	20	01400-00012	104
C-52-10901-64560	32	01103-08016	37	01183-10035	20	01400-00012	104
C-52-11003-05143	32	01103-08030	25	01184-08018	105	01400-10020	26
C-52-11105-54110	32	01103-08035	20	01184-08018	105	01400-10020	27
C-52-11204-69010	32	01103-08040	20	01184-10012	112	01400-20010	10
C-52-11218-15151	32	01103-08040	25	01184-10020	104	01402-00008	54
C-52-11218-15161	32	01103-10020	110	01184-10025	55	01402-00010	50
C-52-11218-25151	32	01103-10030	21	01184-10030	51	01402-00010	97
C-52-11218-25161	32	01103-10030	25	01184-10040	112	01402-00010	104
C-52-11232-54540	32	01103-10040	25	01184-12025	94	01402-00010	104
C-52-11239-51270	32	01103-10045	94	01184-12025	100	01402-00016	97
C-52-11239-52002-P	32	01103-10045	100	01184-12025	107	01402-00016	111
C-52-11242-13300	32	01103-10045	107	01184-12030	53	01402-00016	111
C-52-11242-14500	32	01103-10060	25	01184-12045	96	01402-00022	97
C-52-11242-14530	32	01103-10065	21	01184-12045	102	01402-00022	103
C-52-11242-23300	32	01103-12025	1	01184-12045	109	01402-00022	103
C-52-11242-24500	32	01103-12025	103	01185-04010	37	01402-00022	110
C-52-11242-24530	32	01103-12030	1	01185-04012	11	01402-00022	111
C-52-11242-54010	32	01103-16045	104	01185-06016	15	01402-10014	33
C-52-11242-54011	32	01103-16045	111	01185-08016	2	01412-00030	37
C-52-11246-14607-R	32	01103-16065	96	01185-08016	4	02000-00005	77
C-52-11246-54071	32	01103-16065	102	01185-08016	5	02000-00005	78
C-52-11246-73005	32	01103-16065	109	01185-08016	8	02000-00005	79
C-52-11246-83015	32	01103-16085	103	01185-08016	15	02000-00005	80
C-52-11246-83025	32	01103-20060	97	01185-08016	16	02000-00006	16
C-52-11252-52350	32	01106-10030	31	01185-08016	21	02000-00006	49
C-52-11255-11001	32	01106-10035	31	01185-08016	31	02000-00006	49
C-52-11255-21001	32	01106-10045	31	01185-08016	37	02000-00006	50
C-52-11255-55090	32	01106-10060	31	01185-08016	47	02000-00006	64
C-52-51302-53840	32	01106-12035	26	01185-08016	49	02000-00008	37
C-52-51308-54160	32	01110-36200	60	01185-08016	62	02000-00008	51
C-90-9200-0800	32	01113-10035	34	01185-08016	65	02000-00008	62
R-402-00710-12	71	01116-10030	1	01185-08016	67	02000-00008	68
R-402-65004-03	71	01116-10040	1	01185-08016	86	02000-00010	6
01030-04018	17	01120-10040	49	01185-08020	112	02000-00010	9
01030-05008	37	01120-10040	50	01185-10016	65	02000-00010	10
01030-05055	18	01120-12040	104	01185-10055	71	02000-00010	37
01030-06010	37	01120-12040	104	01186-10016	90	02000-00010	62
01033-05014	14	01120-16040	97	01186-10020	10	02000-00010	97
01043-03010	11	01120-16040	111	01186-10020	112	02000-00010	104
01066-08008	24	01120-16040	111	01186-12025	44	02000-00010	104
01100-06050	17	01170-05045	25	01186-12025	61	02000-00010	111
01100-08020	17	01171-06025	44	01186-12035	53	02000-00010	111
01100-08020	21	01181-08016	63	01186-12040	44	02000-00012	33
01100-08065	3	01183-06010	15	01400-00006	16	02000-00012	43
01100-10025	50	01183-06010	51	01400-00006	62	02000-00012	49
01100-10030	9	01183-06012	49	01400-00006	64	02000-00014	33
01100-10030	51	01183-06012	77	01400-00008	25	02000-00016	109
01100-10050	20	01183-06012	78	01400-00008	70	02000-00030	37
01100-14025	95	01183-06012	79	01400-00010	9	02010-00006	16
01100-14025	101	01183-06012	80	01400-00010	20	02010-00006	62
01100-14025	108	01183-08012	19	01400-00010	37	02010-00006	64
01100-14030	95	01183-08012	68	01400-00010	49	02010-00008	3
01100-14030	101	01183-08012	77	01400-00010	51	02010-00008	20

PARTS NUMBER INDEX

Part No.	Fig.No.	Part No.	Fig.No.	Part No.	Fig.No.	Part No.	Fig.No.
02010-00008	70	02110-00037	33	03320-00180	105	04911-00073	3
02010-00010	9	02120-00040	23	03320-00180	105	04913-10200	15
02010-00010	10	02121-00058	24	03320-00180	105	04913-11100	51
02010-00010	20	02200-02020	51	03320-00180	112	04914-00019	58
02010-00010	37	02200-03020	49	03320-00180	112	04914-00019	105
02010-00010	51	02200-03040	97	03320-00180	112	06006-25015	41
02010-00010	111	02200-03040	103	03320-00210	110	06012-65010	42
02010-00010	111	02200-03040	103	03320-00240	76	06701-25015	41
02010-00012	43	02200-03040	110	03320-00240	104	06711-25015	41
02010-00014	95	02200-03040	111	03320-00240	105	10A73-52231	31
02010-00014	101	02200-06055	37	03320-00240	112	110F7-12001	71
02010-00014	108	02200-16010	49	03320-00240	112	11243-82081	24
02010-00016	38	02200-16010	77	03320-00280	98	11243-82091	24
02010-00016	43	02200-16010	78	03320-00280	105	11243-82161	24
02010-00016	61	02200-16010	79	03320-00290	71	11243-82181	24
02010-00016	109	02200-16010	80	03320-00340	104	11243-82211	24
02010-00016	110	02200-16015	49	03320-00340	111	115G3-82111	21
02010-00020	26	02200-16015	50	03340-00140	71	115G3-82241	21
02010-00036	60	02212-06016	25	03350-00750	43	115G3-82251	21
02010-20010	40	02212-10020	26	03350-00950	110	115G3-82351	24
02011-00008	25	02212-10020	31	03350-01250	103	115G3-82361	24
02011-00008	25	02212-12020	21	03360-00210	110	115G3-82671	25
02011-00008	31	02262-06015	49	04133-00303	86	116H3-82101	21
02011-00008	37	02262-06020	50	04134-20404	112	116H3-82101	23
02011-00010	1	02262-08025	51	04135-20303	86	116H3-82101	25
02011-00010	21	02262-08045	68	04150-20202	76	116H3-82201	25
02011-00010	25	02270-04020	25	04150-20404	76	118H3-82231	25
02011-00010	31	02432-01008	91	04601-44227	112	12N52-50201	20
02011-00010	34	02432-01008	107	04601-44251	112	12N53-22001	30
02011-00010	110	03000-06208	23	04601-44275	112	12N53-22011	30
02011-00012	1	03000-06210	30	04601-44304	112	12N53-32001	28
02011-00012	26	03000-06306	23	04601-44324	112	12N53-32011	28
02011-00012	42	03000-06306	24	04601-44348	112	12N53-50201	29
02011-00012	103	03020-06904	33	04601-44356	112	12N53-50301	31
02011-00016	96	03071-30207	37	04601-44392	112	12N53-52031	31
02011-00016	102	03071-30211	37	04601-44433	112	12N53-52061	31
02011-00016	103	03126-83201	37	04601-44476	112	12N53-52091	31
02011-00016	104	03146-13201	37	04601-44508	112	12N53-52101	31
02011-00016	109	03192-00012	27	04691-02038	86	12N53-52111	31
02011-00016	111	03192-10012	27	04691-04123	85	12N53-52121	31
02011-00020	97	03217-08501	37	04710-04004	58	12N53-52131	31
02100-00020	33	03300-00280	112	04710-04190	87	12N53-52142	31
02100-00040	24	03310-00550	110	04901-00100	37	12N53-52151	31
02100-00045	94	03320-00110	76	04901-00100	96	12N53-52161	31
02100-00045	96	03320-00110	88	04901-00100	102	12N53-52171	31
02100-00045	100	03320-00140	36	04901-00100	109	12N53-52181	31
02100-00045	102	03320-00140	36	04901-00160	90	12N53-52191	31
02100-00045	109	03320-00140	36	04901-00190	37	12N53-52201	31
02100-00050	97	03320-00140	76	04901-00190	38	12N53-52211	31
02100-00050	103	03320-00140	86	04901-00190	50	12N53-52221	31
02100-00050	110	03320-00140	89	04901-00191	37	12N53-52231	31
02100-00050	111	03320-00140	89	04911-00020	87	12N53-52241	31
02110-00014	110	03320-00180	71	04911-00021	98	12N53-52251	31
02110-00018	98	03320-00180	76	04911-00023	89	12N53-52271	31
02110-00018	105	03320-00180	98	04911-00040	85	12N53-52291	31
02110-00018	112	03320-00180	98	04911-00042	85	12N53-52341	31
02110-00022	25	03320-00180	98	04911-00044	7	12N53-59801	31
02110-00028	110	03320-00180	98	04911-00046	85	12N53-59811	31
02110-00030	25	03320-00180	105	04911-00050	7	12N53-59822	31
02110-00035	43	03320-00180	105	04911-00060	3	12N53-80201	24

PARTS NUMBER INDEX

Part No.	Fig.No.	Part No.	Fig.No.	Part No.	Fig.No.	Part No.	Fig.No.
12N53-80301	21	124T3-42661	29	214A2-12201	6	214T0-50162	103
12N53-80311	21	134A3-52041	31	214A2-13001	6	214T0-50192	103
12N53-80321	22	134A3-52051	31	214A2-13011	6	214T0-50202	103
12N53-80341	25	134A7-10301	71	214A2-42141	92	214T0-50212	103
12N53-82001	21	134B3-82401	24	214A2-42611	6	214T0-50222	103
12N53-82012	21	134G3-82111	24	214A2-42611	15	214T0-50232	103
12N53-82021	21	134G3-82121	24	214A2-44501	18	214T0-50242	103
12N53-82041	21	134G3-82131	24	214A4-12161	33	214T0-50252	103
12N53-82061	21	134G3-82141	24	214A4-32041	37	214T0-50262	103
12N53-82081	21	134G3-89811	24	214A4-32051	37	214T0-50272	103
12N53-82091	23	134G3-89831	24	214A4-32161	37	214T0-50282	103
12N53-82101	24	139B3-82121	25	214A4-32201	38	214T0-50311	103
12N53-82111	24	14603-52131	31	214A4-32211	38	214T0-50321	103
12N53-82131	24	15573-42151	25	214A5-22001	49	214T0-50341	103
12N53-82151	23	15573-42151	26	214A5-53012	92	214T0-50351	103
12N53-82161	23	15583-82101	23	214A6-42252	46	214T0-50361	103
12N53-82171	23	15583-82411	25	214A6-42771	66	214T0-50391	103
12N53-82201	23	15583-82421	25	214A7-42071	77	214T0-50401	103
12N53-82211	23	15583-82441	25	214A7-42071	77	214T0-50411	103
12N53-82223	25	15583-82451	25	214A7-42071	78	214T0-50421	103
12N53-82232	25	15583-82461	25	214A7-42071	78	214T0-50431	103
12N53-82251	25	15583-82521	21	214A7-42071	78	214T0-50441	103
12N53-82291	25	15583-82521	23	214A7-42071	79	214T0-50451	103
12N53-82321	25	15583-82571	23	214A7-42071	79	214T0-50461	103
12N53-82331	25	15943-83261	21	214A7-42071	79	214T0-50471	103
12N53-82351	25	16113-52121	31	214A7-42071	79	214T0-50481	103
12N53-82361	25	16113-52141	31	214A7-42071	80	214T0-50511	103
12N53-82371	25	2N40-82801	112	214A7-42071	80	214T0-50521	103
12N53-82421	25	20A75-20201	49	214A7-42071	80	214T0-50541	103
12N53-82451	25	20A75-22001	49	214A7-42071	80	214T0-50551	103
12N53-82481	25	20J75-22201	49	214A7-42071	80	214T0-50561	103
12N53-82501	25	20387-63741	36	214A7-42181	81	214T0-50591	103
12N53-82531	25	209K2-40501	14	214A7-42181	81	214T0-50601	103
12N53-82551	25	209K2-42002	18	214A7-42181	81	214T0-50611	103
12N53-82571	25	209K2-42021	18	214A7-42181	81	214T0-50621	103
12N53-82581	25	209K2-42041	18	214A7-42191	81	214T0-50631	103
12N53-82621	20	209K2-42351	15	214A7-42201	81	214T0-50641	103
12N53-82621	21	209K2-43001	67	214A8-02201	96	214T0-50651	103
12N53-82621	28	209K4-12551	35	214A8-02201	102	214T0-50661	103
12N53-82641	22	209M7-92921	88	214A8-02201	109	214T0-50671	103
12N53-82641	28	209P7-62531	89	214A8-42631	97	214T0-50681	103
12N53-82701	25	210F2-42031	18	214A8-44151	98	214T0-50701	104
12N53-82711	21	211F8-22261	104	214A8-44151	105	214T0-50711	104
12N53-82721	25	211F8-22271	104	214A8-44151	112	214T0-50721	104
12N53-82732	25	21152-42091	15	214A8-52051	37	214T0-50731	104
12N53-82741	25	21232-32551	9	214A8-52051	43	214T0-50741	104
12N53-82761	21	21232-32551	10	214J0-81222	104	214T0-50751	104
12N53-82771	25	21237-52051	56	214J8-11002	93	214T0-50761	104
12N53-82781	25	21237-52051	56	214J8-11002	99	214T0-50771	104
12N53-89801	21	21237-52062	56	214J8-11002	106	214T0-50781	104
12N53-89801	23	21237-52062	56	214J8-42472	104	214T0-50791	104
12N53-89811	21	214A0-72701	109	214J8-42561	104	214T0-50801	104
12N53-89831	25	214A0-82651	110	214J8-42581	97	214T0-50811	104
12163-82331	21	214A0-82831	97	214J8-42581	104	214T0-50821	104
12163-82421	21	214A0-82831	104	214J8-42581	111	214T0-50831	104
12163-82541	21	214A0-82831	111	214J8-46001	104	214T0-50841	104
12163-82541	23	214A2-12001	6	214T0-50112	103	214T0-50851	104
12163-82561	22	214A2-12021	6	214T0-50122	103	214T0-50861	104
124G3-52011	31	214A2-12111	6	214T0-50142	103	214T0-50871	104
124T3-42651	29	214A2-12141	6	214T0-50152	103	214T0-50881	104

Part No.	Fig.No.	Part No.	Fig.No.	Part No.	Fig.No.	Part No.	Fig.No.
214T0-50901	104	214T0-51541	104	214T0-82691	111	216G8-33361	109
214T0-50911	104	214T0-51551	104	214T0-82701	111	216G8-33361	109
214T0-50921	104	214T0-51561	104	214T0-83102	110	216G8-33371	96
214T0-50931	104	214T0-51571	104	214T0-83111	110	216G8-33371	102
214T0-50941	104	214T0-51581	104	214T0-83121	110	216G8-33371	109
214T0-50951	104	214T0-51591	104	214T0-83181	111	216G8-33371	109
214T0-50961	104	214T0-51601	104	214T0-83251	110	216G8-52301	96
214T0-50971	104	214T0-51611	104	214T0-83521	110	216G8-52301	102
214T0-50981	104	214T0-51621	104	214T0-83531	110	216G8-52301	109
214T0-50991	104	214T0-51631	104	214T0-83541	110	216G9-12052	92
214T0-51001	104	214T0-51641	104	214T0-83601	111	216G9-12062	92
214T0-51011	104	214T0-51651	104	214T0-83611	111	216G9-12071	92
214T0-51021	104	214T0-51661	104	214T0-83611	111	216G9-12131	92
214T0-51031	104	214T0-51671	104	214T0-89801	110	216H3-92171	62
214T0-51041	104	214T0-51681	104	215E4-32341	37	216H3-92171	68
214T0-51051	104	214T0-51701	104	215E4-39801	37	216H5-42141	62
214T0-51061	104	214T0-51711	104	215E4-52231	37	216M7-62101	71
214T0-51071	104	214T0-51721	104	215E4-52231	43	217G2-42021	16
214T0-51081	104	214T0-51731	104	215E8-42241	97	22F90-91001	112
214T0-51101	104	214T0-51741	104	216G2-22051	8	22N42-12051	7
214T0-51111	104	214T0-51751	104	216G2-40602	17	22N50-73191	112
214T0-51121	104	214T0-51761	104	216G2-40701	17	22N51-00161	1
214T0-51131	104	214T0-51771	104	216G2-40711	17	22N51-00201	1
214T0-51151	104	214T0-51781	104	216G2-40721	17	22N51-00211	1
214T0-51161	104	214T0-51791	104	216G2-40731	17	22N51-00301	3
214T0-51171	104	214T0-51801	104	216G2-42311	15	22N51-00501	1
214T0-51181	104	214T0-51811	104	216G2-42321	15	22N51-00511	1
214T0-51191	104	214T0-51821	104	216G2-43111	16	22N51-00602	3
214T0-51201	104	214T0-51831	104	216G2-43401	15	22N51-02002	2
214T0-51211	104	214T0-51841	104	216G2-43411	15	22N51-02201	3
214T0-51221	104	214T0-51851	104	216G2-43421	15	22N51-02251	3
214T0-51231	104	214T0-51861	104	216G2-43531	17	22N52-12001	7
214T0-51241	104	214T0-51871	104	216G2-43542	17	22N52-22101	59
214T0-51251	104	214T0-51881	104	216G2-43571	17	22N52-22201	57
214T0-51261	104	214T0-53501	105	216G2-43592	17	22N52-22201	59
214T0-51271	104	214T0-60101	105	216G2-43611	17	22N52-32021	10
214T0-51281	104	214T0-60111	105	216G2-43651	15	22N52-40301	11
214T0-51301	104	214T0-60121	105	216G2-43711	15	22N52-42021	15
214T0-51311	104	214T0-60131	105	216G4-12101	33	22N52-42031	15
214T0-51321	104	214T0-60141	105	216G4-12111	33	22N52-42102	15
214T0-51331	104	214T0-60151	105	216G4-12681	35	22N52-42111	16
214T0-51341	104	214T0-60161	105	216G4-12711	35	22N52-42201	13
214T0-51351	104	214T0-60171	105	216G6-42451	62	22N52-42213	12
214T0-51361	104	214T0-60191	105	216G6-42481	62	22N52-42251	18
214T0-51371	104	214T0-60201	105	216G6-42541	62	22N52-42301	16
214T0-51381	104	214T0-60211	105	216G6-42921	64	22N52-42311	15
214T0-51391	104	214T0-60221	105	216G6-42931	64	22N52-42321	15
214T0-51401	104	214T0-60231	105	216G6-43231	40	22N52-42331	15
214T0-51411	104	214T0-60241	105	216G6-43561	61	22N52-42501	11
214T0-51421	104	214T0-60251	105	216G6-52161	65	22N52-42511	11
214T0-51431	104	214T0-60261	105	216G6-52291	62	22N52-43001	15
214T0-51441	104	214T0-60271	105	216G6-52291	65	22N53-02611	26
214T0-51451	104	214T0-60281	105	216G6-52291	68	22N54-10201	33
214T0-51461	104	214T0-62202	105	216G7-32021	72	22N54-10201	35
214T0-51471	104	214T0-62251	105	216G7-32021	73	22N54-10302	34
214T0-51481	104	214T0-82611	111	216G7-32021	74	22N54-10322	34
214T0-51501	104	214T0-82631	111	216G7-32021	75	22N54-10342	34
214T0-51511	104	214T0-82661	111	216G7-52201	58	22N54-10361	34
214T0-51521	104	214T0-82671	111	216G8-33361	96	22N54-10371	34
214T0-51531	104	214T0-82681	111	216G8-33361	102	22N54-12011	33

PARTS NUMBER INDEX

Part No.	Fig.No.	Part No.	Fig.No.	Part No.	Fig.No.	Part No.	Fig.No.
22N54-12022	33	22N56-42041	61	22N57-33031	83	22N57-33631	84
22N54-12201	67	22N56-42602	64	22N57-33041	73	22N57-33631	84
22N54-12311	67	22N56-42612	64	22N57-33041	74	22N57-33641	84
22N54-12321	67	22N56-42701	67	22N57-33041	75	22N57-33641	84
22N54-12411	35	22N56-42711	69	22N57-33041	84	22N57-33641	84
22N54-13001	35	22N56-42722	69	22N57-33041	84	22N57-33651	83
22N54-13021	35	22N56-42731	67	22N57-33041	84	22N57-33651	84
22N54-13031	35	22N56-42741	67	22N57-33071	82	22N57-33651	84
22N54-32181	37	22N56-42751	67	22N57-33081	84	22N57-33651	84
22N54-32211	37	22N56-42761	69	22N57-33081	84	22N57-33661	84
22N54-32222	37	22N56-42771	67	22N57-33081	84	22N57-33661	84
22N54-32241	37	22N56-42791	67	22N57-33131	83	22N57-33661	84
22N54-32261	37	22N56-42811	69	22N57-33141	72	22N57-33671	83
22N54-32311	38	22N56-42852	69	22N57-33141	73	22N57-33671	84
22N54-32321	38	22N56-42861	67	22N57-33141	74	22N57-33671	84
22N54-32402	37	22N56-42901	66	22N57-33141	75	22N57-33671	84
22N54-33051	37	22N56-42911	66	22N57-33221	82	22N57-33691	83
22N54-50221	43	22N56-43041	62	22N57-33241	82	22N57-33701	83
22N54-52001	43	22N56-43051	62	22N57-33251	82	22N57-33751	82
22N54-52101	43	22N56-43221	62	22N57-33271	82	22N57-33751	83
22N54-52141	43	22N56-43252	68	22N57-33281	82	22N57-33751	84
22N54-52141	97	22N56-43271	62	22N57-33301	72	22N57-33751	84
22N54-52141	111	22N56-43281	62	22N57-33301	73	22N57-33751	84
22N54-59801	43	22N56-43481	68	22N57-33301	74	22N57-33761	83
22N55-12271	45	22N56-43531	62	22N57-33301	75	22N57-33771	83
22N55-12281	45	22N56-43541	62	22N57-33311	72	22N57-33771	83
22N55-12701	46	22N56-50201	65	22N57-33311	73	22N57-33901	84
22N55-12711	46	22N56-50212	65	22N57-33311	74	22N57-33901	84
22N55-12721	46	22N56-52201	65	22N57-33311	75	22N57-33901	84
22N55-12901	47	22N56-52222	65	22N57-33331	82	22N57-40011	77
22N55-13181	48	22N56-52231	65	22N57-33341	82	22N57-40011	78
22N55-13181	61	22N56-52302	66	22N57-33351	82	22N57-40011	79
22N55-13191	48	22N56-52311	66	22N57-33351	82	22N57-40011	80
22N55-20211	49	22N56-52321	66	22N57-33541	83	22N57-40021	77
22N55-22031	49	22N56-52402	65	22N57-33541	84	22N57-40021	78
22N55-22121	49	22N57-30221	72	22N57-33541	84	22N57-40021	79
22N55-22131	49	22N57-30231	73	22N57-33541	84	22N57-40021	80
22N55-40202	50	22N57-30241	74	22N57-33551	83	22N57-40031	78
22N55-40303	50	22N57-30251	75	22N57-33561	83	22N57-40031	79
22N55-40403	50	22N57-32041	72	22N57-33561	84	22N57-40031	80
22N55-42101	50	22N57-32041	73	22N57-33561	84	22N57-40041	79
22N55-42171	52	22N57-32041	74	22N57-33561	84	22N57-40041	80
22N55-42191	4	22N57-32041	75	22N57-33571	83	22N57-40051	80
22N55-42191	50	22N57-32321	72	22N57-33571	84	22N57-42001	77
22N55-42601	50	22N57-32331	73	22N57-33571	84	22N57-42001	78
22N55-50201	55	22N57-32341	74	22N57-33571	84	22N57-42001	79
22N56-32041	60	22N57-32351	75	22N57-33581	83	22N57-42001	80
22N56-32301	60	22N57-33011	72	22N57-33581	84	22N57-42101	77
22N56-40102	61	22N57-33011	73	22N57-33581	84	22N57-42101	78
22N56-40203	62	22N57-33011	74	22N57-33581	84	22N57-42101	79
22N56-40252	68	22N57-33011	75	22N57-33591	83	22N57-42101	80
22N56-40262	68	22N57-33011	82	22N57-33591	84	22N57-42121	77
22N56-40272	68	22N57-33021	72	22N57-33591	84	22N57-42121	78
22N56-40302	63	22N57-33021	73	22N57-33591	84	22N57-42121	79
22N56-40361	62	22N57-33021	74	22N57-33621	83	22N57-42121	80
22N56-40371	63	22N57-33021	75	22N57-33621	84	22N57-42151	77
22N56-40401	63	22N57-33031	72	22N57-33621	84	22N57-42151	78
22N56-40411	68	22N57-33031	73	22N57-33621	84	22N57-42151	79
22N56-40421	68	22N57-33031	74	22N57-33631	83	22N57-42151	80
22N56-40471	62	22N57-33031	75	22N57-33631	84	22N57-42161	77

PARTS NUMBER INDEX

Part No.	Fig.No.	Part No.	Fig.No.	Part No.	Fig.No.	Part No.	Fig.No.
22N57-42161	78	22S52-32321	9	22Y50-70461	109	22Y50-81001	111
22N57-42161	79	22S52-32331	9	22Y50-70471	109	22Y50-81011	111
22N57-42201	72	22S92-30101	9	22Y50-70481	109	22Y50-81021	111
22N57-42201	73	22Y50-40201	102	22Y50-70491	109	22Y50-81031	111
22N57-42201	74	22Y50-40211	102	22Y50-70501	109	22Y50-81041	111
22N57-42201	75	22Y50-40221	102	22Y50-70601	109	22Y50-81051	111
22N57-42211	72	22Y50-40231	102	22Y50-70611	109	22Y50-81061	111
22N57-42211	73	22Y50-40241	102	22Y50-70621	109	22Y50-81071	111
22N57-42211	74	22Y50-40251	102	22Y50-70631	109	22Y50-81081	111
22N57-42211	75	22Y50-40261	102	22Y50-70641	109	22Y50-81091	111
22N57-52303	57	22Y50-40271	102	22Y50-70651	109	22Y50-81101	111
22N57-53001	57	22Y50-40281	102	22Y50-70661	109	22Y50-81201	111
22N57-53101	58	22Y50-40291	102	22Y50-70671	109	22Y50-81211	111
22N57-62001	85	22Y50-40301	102	22Y50-70681	109	22Y50-81221	111
22N57-62101	85	22Y50-40311	102	22Y50-70691	109	22Y50-81231	111
22N57-62201	85	22Y50-40321	102	22Y50-70701	109	22Y50-81241	111
22N57-62221	88	22Y50-40331	102	22Y50-80201	110	22Y50-81251	111
22N57-62531	88	22Y50-40341	102	22Y50-80211	110	22Y50-81261	111
22N57-63011	76	22Y50-40351	102	22Y50-80221	110	22Y50-81271	111
22N57-80201	89	22Y50-40361	102	22Y50-80231	110	22Y50-81281	111
22N57-80301	89	22Y50-40371	102	22Y50-80241	110	22Y50-81291	111
22N57-82101	89	22Y50-40381	102	22Y50-80251	110	22Y50-81301	111
22N57-82111	89	22Y50-40401	102	22Y50-80261	110	22Y50-83001	110
22N58-32701	94	22Y50-40411	102	22Y50-80271	110	22Y50-83011	103
22N58-32701	100	22Y50-40421	102	22Y50-80281	110	22Y50-83201	110
22N58-32701	107	22Y50-40431	102	22Y50-80291	110	22Y50-83211	110
22N58-32711	94	22Y50-40441	102	22Y50-80301	110	22Y50-83701	110
22N58-32711	100	22Y50-40451	102	22Y50-80501	110	22Y50-83711	110
22N58-32711	107	22Y50-40461	102	22Y50-80511	110	22Y50-83721	110
22N58-43011	104	22Y50-40471	102	22Y50-80521	110	22Y50-83731	110
22N58-43011	104	22Y50-40481	102	22Y50-80531	110	22Y50-83741	110
22N58-45001	98	22Y50-40491	102	22Y50-80541	110	22Y50-83751	110
22N58-45001	112	22Y50-40501	102	22Y50-80551	110	22Y50-83761	110
22N58-52201	90	22Y50-40511	102	22Y50-80561	110	22Y50-83771	110
22N58-52301	90	22Y50-40521	102	22Y50-80571	110	22Y50-83781	110
22N58-52501	96	22Y50-40531	102	22Y50-80581	110	22Y50-83791	110
22N58-52501	102	22Y50-40541	102	22Y50-80591	110	22Y50-83801	110
22N58-52501	109	22Y50-40551	102	22Y50-80601	110	22Y50-90201	107
22N58-52811	90	22Y50-40561	102	22Y50-80701	111	22Y50-90401	112
22N58-52821	90	22Y50-40571	102	22Y50-80711	111	22Y50-92131	112
22N58-52831	90	22Y50-40581	102	22Y50-80721	111	22Y50-93101	112
22N58-52841	90	22Y50-60201	100	22Y50-80731	111	22Y51-00102	1
22N58-52851	90	22Y50-62301	105	22Y50-80741	111	22Y52-10101	4
22N58-52861	90	22Y50-70201	109	22Y50-80751	111	22Y52-12301	5
22N58-52901	90	22Y50-70211	109	22Y50-80761	111	22Y52-30301	10
22N58-52911	90	22Y50-70221	109	22Y50-80771	111	22Y53-00301	26
22N58-52921	90	22Y50-70231	109	22Y50-80781	111	22Y53-00401	27
22N58-52931	90	22Y50-70241	109	22Y50-80791	111	22Y53-00601	26
22N58-52941	90	22Y50-70251	109	22Y50-80801	111	22Y53-00611	26
22N59-12041	91	22Y50-70261	109	22Y50-80891	111	22Y53-02021	27
22N59-12051	91	22Y50-70271	109	22Y50-80901	111	22Y53-02071	27
22N59-12061	91	22Y50-70281	109	22Y50-80911	111	22Y53-02151	26
22N59-12101	91	22Y50-70291	109	22Y50-80921	111	22Y53-02201	27
22N59-12111	91	22Y50-70301	109	22Y50-80931	111	22Y53-70101	32
22N59-12261	92	22Y50-70401	109	22Y50-80941	111	22Y53-70201	32
22N59-12351	92	22Y50-70411	109	22Y50-80951	111	22Y53-72031	32
22N92-32001	10	22Y50-70421	109	22Y50-80961	111	22Y54-30101	37
22N97-62381	86	22Y50-70431	109	22Y50-80971	111	22Y54-30121	37
22N97-62391	86	22Y50-70441	109	22Y50-80981	111	22Y54-32501	37
22S52-32001	9	22Y50-70451	109	22Y50-80991	111	22Y54-32511	37

Part No.	Fig.No.	Part No.	Fig.No.	Part No.	Fig.No.	Part No.	Fig.No.
22Y54-33151	37	22Y58-40201	97	22Y59-12601	91	224T8-42701	111
22Y54-33161	37	22Y58-40211	97	22018-30121	94	224T8-42711	97
22Y54-33171	37	22Y58-40221	97	22018-30121	100	224T8-42711	111
22Y54-40051	41	22Y58-40231	97	22018-30121	107	224T8-42711	111
22Y54-40151	42	22Y58-40241	97	22018-30261	94	224T8-42801	111
22Y54-40201	41	22Y58-40251	97	22018-30261	100	224T8-46011	97
22Y54-50201	43	22Y58-40261	97	22018-30261	107	224T8-46011	111
22Y54-52201	43	22Y58-40271	97	22192-22091	8	224W2-12541	4
22Y54-52251	43	22Y58-40281	97	22193-03001	26	22438-42641	110
22Y55-10161	44	22Y58-40291	97	22199-12401	37	225A7-62021	71
22Y55-42301	52	22Y58-40301	97	22199-12401	38	225R6-42031	67
22Y55-42401	52	22Y58-40311	97	22199-12401	43	22517-40051	77
22Y56-12501	40	22Y58-40321	97	22199-12401	50	22517-40051	78
22Y56-12511	40	22Y58-40331	97	22199-12401	90	22517-40051	79
22Y57-52101	58	22Y58-40341	97	22199-12401	90	22517-40051	80
22Y57-62401	88	22Y58-40351	97	222A2-10211	4	22518-40151	103
22Y57-62451	88	22Y58-40361	97	222A2-22061	59	22518-40151	110
22Y58-20201	94	22Y58-40371	97	222A2-42031	67	22548-34051	96
22Y58-30201	96	22Y58-40381	97	22214-30321	37	22548-34051	102
22Y58-30211	96	22Y58-40401	97	22250-52931	103	22548-34051	109
22Y58-30221	96	22Y58-40411	97	22252-32241	9	22548-34061	96
22Y58-30231	96	22Y58-40421	97	22252-32241	10	22548-34061	102
22Y58-30241	96	22Y58-40431	97	22252-32251	6	22548-34061	109
22Y58-30251	96	22Y58-40441	97	22252-32251	9	22570-53201	104
22Y58-30261	96	22Y58-40451	97	22256-42001	62	22655-42591	51
22Y58-30271	96	22Y58-40461	97	224G5-42061	51	22658-52301	43
22Y58-30281	96	22Y58-40471	97	224T0-53011	104	22658-52301	97
22Y58-30291	96	22Y58-40481	97	224T0-53031	104	22658-52301	111
22Y58-30301	96	22Y58-40491	97	224T0-53301	104	22679-43431	97
22Y58-30311	96	22Y58-40501	97	224T0-53311	104	22679-43431	97
22Y58-30321	96	22Y58-40511	97	224T0-53401	104	22679-43431	111
22Y58-30331	96	22Y58-40521	97	224T0-53401	104	22679-43431	111
22Y58-30341	96	22Y58-40531	97	224T0-53451	103	228C0-91011	98
22Y58-30351	96	22Y58-40541	97	224T0-53451	110	228C0-91011	105
22Y58-30361	96	22Y58-40551	97	224T0-59801	103	228C0-92281	105
22Y58-30371	96	22Y58-40561	97	224T0-59811	104	228C8-42211	111
22Y58-30381	96	22Y58-40571	97	224T0-60171	105	228C8-42231	111
22Y58-30401	96	22Y58-40581	97	224T0-80002	103	228C8-42241	111
22Y58-30411	96	22Y58-41001	98	224T0-80012	103	228C8-42261	111
22Y58-30421	96	22Y58-41001	105	224T0-80032	103	229F0-94101	112
22Y58-30431	96	22Y58-41001	112	224T0-80042	103	229F2-22071	59
22Y58-30441	96	22Y58-42001	97	224T0-80201	103	229F2-22151	57
22Y58-30451	96	22Y58-42001	111	224T0-80211	103	229F2-22151	59
22Y58-30461	96	22Y58-42101	98	224T0-80231	103	229F2-22171	59
22Y58-30471	96	22Y58-42101	105	224T0-80241	103	229L0-82551	110
22Y58-30481	96	22Y58-42501	97	224T0-80401	103	230C2-42201	12
22Y58-30491	96	22Y58-42531	97	224T0-80411	103	230C2-42301	16
22Y58-30501	96	22Y58-42601	97	224T0-80431	103	23232-42072	12
22Y58-30511	96	22Y58-42601	111	224T0-80441	103	23235-40091	53
22Y58-30521	96	22Y58-50101	90	224T0-82421	103	234A1-00101	2
22Y58-30531	96	22Y58-50201	90	224T0-82501	103	234A1-00111	2
22Y58-30541	96	22Y58-52801	90	224T0-82511	103	234A1-00121	2
22Y58-30551	96	22Y59-12011	91	224T0-82521	103	234A2-12201	4
22Y58-30561	96	22Y59-12021	91	224T0-82531	103	234A2-12211	4
22Y58-30571	96	22Y59-12101	91	224T0-82541	103	234A2-42301	19
22Y58-30581	96	22Y59-12151	91	224T0-82561	103	234A6-43121	63
22Y58-33351	109	22Y59-12161	91	224T0-82561	110	234A8-02101	98
22Y58-33361	96	22Y59-12171	91	224T8-42512	111	234A8-02101	105
22Y58-33361	102	22Y59-12181	91	224T8-42701	97	234A8-42551	104
22Y58-33361	109	22Y59-12281	91	224T8-42701	111	234A8-42551	104

PARTS NUMBER INDEX

Part No.	Fig.No.	Part No.	Fig.No.	Part No.	Fig.No.	Part No.	Fig.No.
234A8-42561	40	239A2-42221	17	23918-45991	103	24328-10544	93
234A8-42571	97	239A4-12402	33	23918-46031	97	24328-10544	99
234F8-22201	95	239A4-12411	33	23918-46051	103	24328-10544	106
234F8-22201	101	239A4-12431	33	23918-46051	110	24328-10554	93
234F8-22201	108	239A4-12441	33	23918-46051	111	24328-10554	99
234H7-60351	36	239A5-42301	53	23918-46091	97	24328-10554	106
23451-02011	10	239A9-12051	92	23918-46131	97	24328-10564	93
23453-02071	27	239A9-12071	92	23918-46131	110	24328-10564	99
23453-02091	27	239A9-12301	92	23918-46131	111	24328-10564	106
23453-02131	27	239A9-92001	47	23918-46171	103	24328-10574	93
23457-42041	78	23913-02041	39	23918-46191	97	24328-10574	99
23457-42041	79	23918-42681	97	23918-46211	111	24328-10574	106
23458-32052	96	23918-42681	103	23918-46271	103	24328-10584	93
23458-32052	102	23918-42681	110	23918-46291	97	24328-10584	99
23458-32052	109	23918-42681	111	23918-46391	97	24328-10584	106
23460-53161	97	23918-45471	103	242F1-02111	3	24328-10594	93
23460-53161	111	23918-45531	103	242F1-02121	3	24328-10594	99
23460-53171	43	23918-45551	103	242F2-42151	16	24328-10594	106
23460-53181	97	23918-45551	110	242F2-42301	15	24328-10604	93
23460-53181	111	23918-45571	97	242F2-42311	15	24328-10604	106
235C2-42131	17	23918-45591	103	242F2-42321	15	24328-12304	93
235C2-42141	17	23918-45611	97	242F6-80101	70	24328-12304	99
23647-40041	77	23918-45611	103	242F6-82041	70	24328-12304	106
23648-50161	104	23918-45611	110	242F6-82051	70	24328-12314	93
23650-82141	110	23918-45631	103	242F6-82081	70	24328-12314	99
23650-82161	110	23918-45631	111	242F6-82091	70	24328-12314	106
23650-82403	110	23918-45651	110	242F6-82101	70	24328-12324	93
23652-12051	6	23918-45671	97	242F6-82111	70	24328-12324	99
23652-12051	9	23918-45691	103	242F6-82121	70	24328-12324	106
23652-22121	3	23918-45691	103	242F6-82141	70	24328-12334	93
23653-02001	27	23918-45691	111	242F6-82271	70	24328-12334	99
23654-32041	37	23918-45711	97	242F6-82281	70	24328-12334	106
23654-32161	37	23918-45711	97	24230-52701	105	24328-12344	93
23654-34051	39	23918-45711	110	24230-58491	103	24328-12344	99
23655-22101	62	23918-45731	103	24235-42091	53	24328-12344	106
23655-42421	50	23918-45731	111	243C6-40021	62	24328-12354	93
23655-42421	50	23918-45751	110	243C6-42821	68	24328-12354	99
23656-42601	25	23918-45771	97	24310-82641	103	24328-12354	106
23657-42131	78	23918-45771	103	24319-45751	103	24328-12364	93
23659-44602	98	23918-45771	103	24319-45751	110	24328-12364	99
23659-44602	105	23918-45771	103	24319-45781	97	24328-12364	106
23659-44602	112	23918-45791	110	24319-45781	111	24328-12374	93
23670-82251	110	23918-45791	111	24319-45791	97	24328-12374	99
23670-82261	110	23918-45811	97	24319-45791	111	24328-12374	106
23678-06002	96	23918-45811	110	24320-58521	105	24328-12384	93
23678-06002	102	23918-45831	97	24328-10503	93	24328-12384	99
23678-06002	109	23918-45831	111	24328-10503	99	24328-12384	106
23772-12071	4	23918-45851	103	24328-10503	106	24328-12604	99
23775-42101	51	23918-45871	97	24328-10514	93	24328-40115	98
238A2-42151	16	23918-45871	111	24328-10514	93	24328-40125	98
23818-30071	96	23918-45891	97	24328-10514	99	24328-40140	98
23818-30071	102	23918-45891	103	24328-10514	99	24328-40150	98
23818-30071	109	23918-45891	110	24328-10514	106	24328-40150	98
23818-30271	97	23918-45891	111	24328-10514	106	24328-40150	98
23818-30271	103	23918-45911	97	24328-10523	93	24328-40150	98
23818-30271	110	23918-45911	97	24328-10523	99	24328-40150	112
23818-30271	111	23918-45951	103	24328-10523	106	24328-40150	112
23870-52871	76	23918-45971	110	24328-10533	93	24328-40155	112
23870-52871	104	23918-45971	111	24328-10533	99	24328-40165	98
239A2-12021	6	23918-45991	97	24328-10533	106	24328-40165	112

PARTS NUMBER INDEX

Part No.	Fig.No.	Part No.	Fig.No.	Part No.	Fig.No.	Part No.	Fig.No.
24328-40170	98	24329-46201	112	256C2-42231	16	277P8-22081	100
24328-40170	112	24329-46201	112	256C6-32011	1	277P8-22081	102
24328-40175	98	24389-46011	103	256C9-52372	1	277P8-22081	107
24328-40175	98	24453-02061	27	256C9-52372	37	277P8-22081	109
24328-40175	112	24453-02102	27	256G1-08011	2	277P8-22081	109
24328-40180	98	24453-02131	27	256G1-08021	2	277P8-22081	109
24328-40180	112	24454-32232	37	256T2-42121	67	277P8-32701	96
24328-40185	98	24459-42291	104	25786-32031	60	277P8-32701	102
24328-40185	98	24459-42951	98	25790-94021	112	277P8-32701	109
24328-40190	98	24459-42951	105	25808-43111	110	278M6-42031	66
24328-40190	112	24459-42951	112	25808-43121	110	27978-42421	104
24328-40195	98	24459-42991	98	25908-44101	103	27978-42601	98
24328-40195	112	24460-60101	98	25908-44101	104	27979-43101	98
24328-40200	98	24600-82291	103	25908-44101	110	27979-43101	105
24328-40200	98	24600-82701	111	25908-44111	103	27979-43101	112
24328-40200	98	24600-82711	111	25908-44111	104	280C2-42331	14
24328-40200	112	24609-41242	97	25908-44111	110	280C2-42341	14
24328-40205	112	24609-41242	103	25908-44281	111	280C2-42351	14
24328-40210	98	24609-41242	110	25953-72011	32	281E6-42521	67
24328-40215	98	24609-41242	111	26094-17021	34	281E6-42571	67
24328-40215	112	24609-42111	96	26519-12281	92	281E7-42101	81
24328-40220	98	24609-42111	102	26602-42041	37	281E7-62041	88
24328-40220	112	24609-42111	109	26602-42081	8	283A7-62501	36
24328-40220	112	24609-42121	96	26602-42101	112	29590-64501	4
24328-40225	98	24609-42121	102	26602-42221	86	514A2-42201	43
24328-40225	112	24609-42121	109	27042-42322	89	514A2-72411	81
24328-40230	98	24629-41501	97	27045-40302	51	514A2-72411	81
24328-40235	98	24629-41511	97	27045-40302	54	514A2-72411	81
24328-40235	98	24629-41521	97	271A7-52301	57	514A5-12011	48
24328-40235	98	24629-41531	97	271A9-12251	92	514A5-12021	45
24328-40235	112	24629-41541	97	271F6-42531	37	514J3-74061	109
24328-40240	112	24629-41551	97	273A9-12242	91	516G5-13051	44
24328-40245	98	24629-41561	97	27397-52101	21	516G5-13151	48
24328-40255	98	24629-41571	97	27410-53201	110	52356-80302	42
24328-40255	98	24629-41581	97	27419-12062	92	534A5-00401	47
24328-40260	112	24629-41591	97	27419-12072	92	534A7-42231	40
24328-40265	98	24629-41601	97	27662-62711	62	534F3-82001	42
24328-40265	112	24629-41611	97	277H7-60601	76	53651-12551	2
24328-40270	98	24629-41621	97	277P8-22051	94	53658-43001	104
24328-40280	98	24629-41631	97	277P8-22051	96	53658-43001	111
24328-40280	112	24629-41641	97	277P8-22051	100	53658-43011	104
24328-40285	112	24629-41651	97	277P8-22051	102	53658-43011	111
24328-40290	98	24629-41661	97	277P8-22051	107	53658-43021	104
24328-40295	112	24629-41671	97	277P8-22051	109	53658-43021	111
24328-40300	98	24629-41681	97	277P8-22051	109	53658-43031	104
24328-40300	112	251A2-22001	8	277P8-22051	109	53658-43031	111
24328-40305	98	25303-02102	27	277P8-22061	94	53658-43041	104
24328-40325	98	25492-22001	8	277P8-22061	100	53658-43041	111
24328-40335	98	25592-42081	16	277P8-22061	107	53675-55051	98
24328-40360	98	25592-42121	59	277P8-22061	109	53675-55051	112
24329-45441	97	25595-42411	54	277P8-22071	94	55593-02371	80
24329-45441	103	25595-42421	54	277P8-22071	96	55593-62551	105
24329-45441	110	25595-42452	54	277P8-22071	100	62050-12331	109
24329-45441	111	25595-42482	54	277P8-22071	102	62150-14321	112
24329-45541	21	25595-42491	51	277P8-22071	107	63110-18901	107
24329-45541	23	25595-42502	54	277P8-22071	109	63130-15301	109
24329-45541	25	25599-32001	62	277P8-22071	109	97103-35431	43
24329-46201	98	25599-32021	62	277P8-22071	109		
24329-46201	98	256A1-08031	2	277P8-22081	94		
24329-46201	112	256C1-12111	49	277P8-22081	96		

No.PF−2Y5A
2007年　3月　発行

TCM株式会社
本　社　大阪市西区京町堀1−15−10
発 行　TCMテクノ株式会社

ISSUED:MARCH,2007

TCM CORPORATION
INTERNATIONAL MARKETING DIVISION : 1-15-5, Nishi−shimbashi, Minato−ku, Tokyo
105−0003, Japan
FAX : Japan +81−3−35918152, 3−35918153

無断で転載・複製を禁ず
All rights reserved.

SA−0703001(H)　Printed in Japan